www.digitalkhodro.org

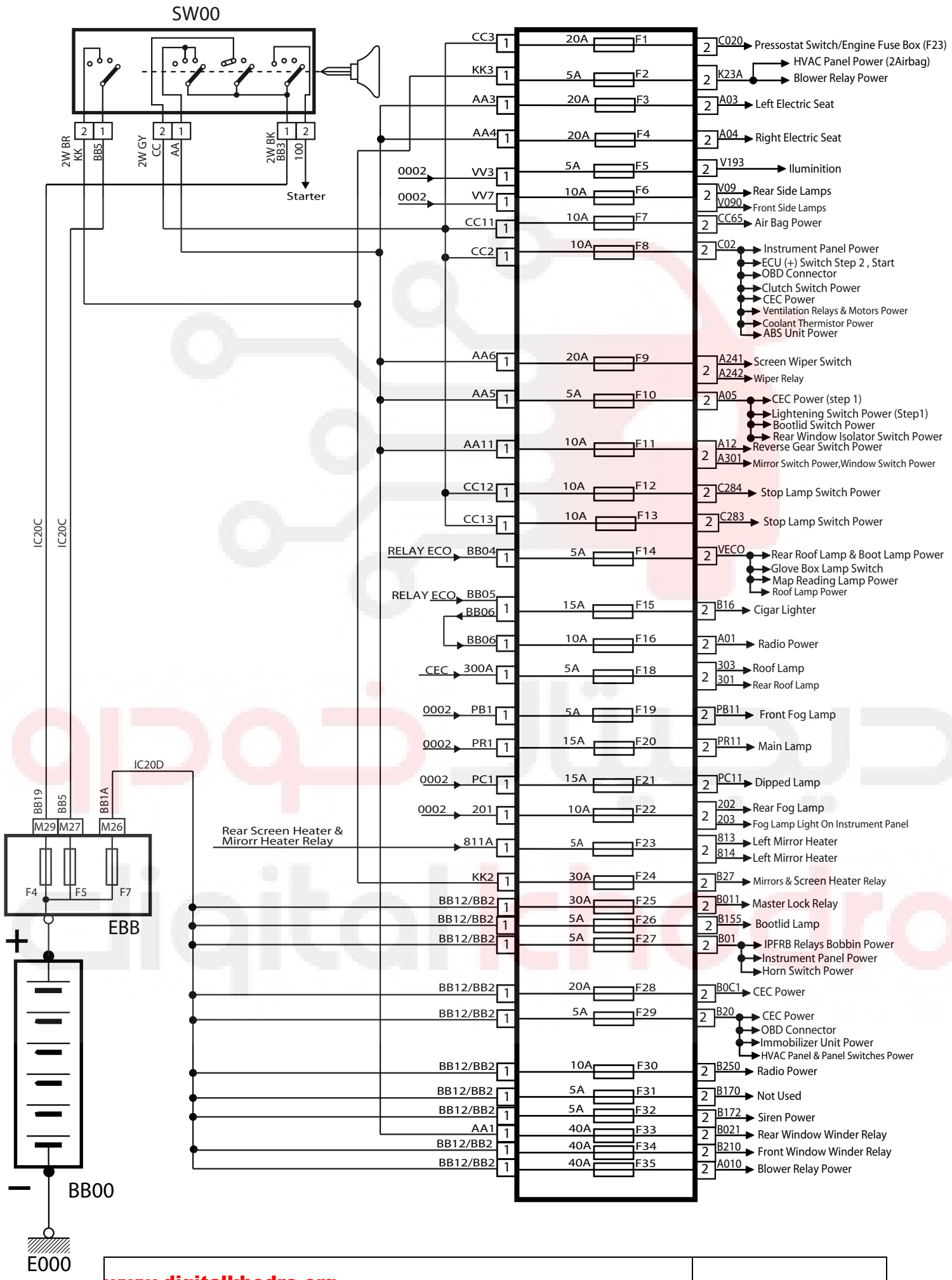

www.digitalkhodro.org