Stability Control (With Brake Central Unit Supply Relay)

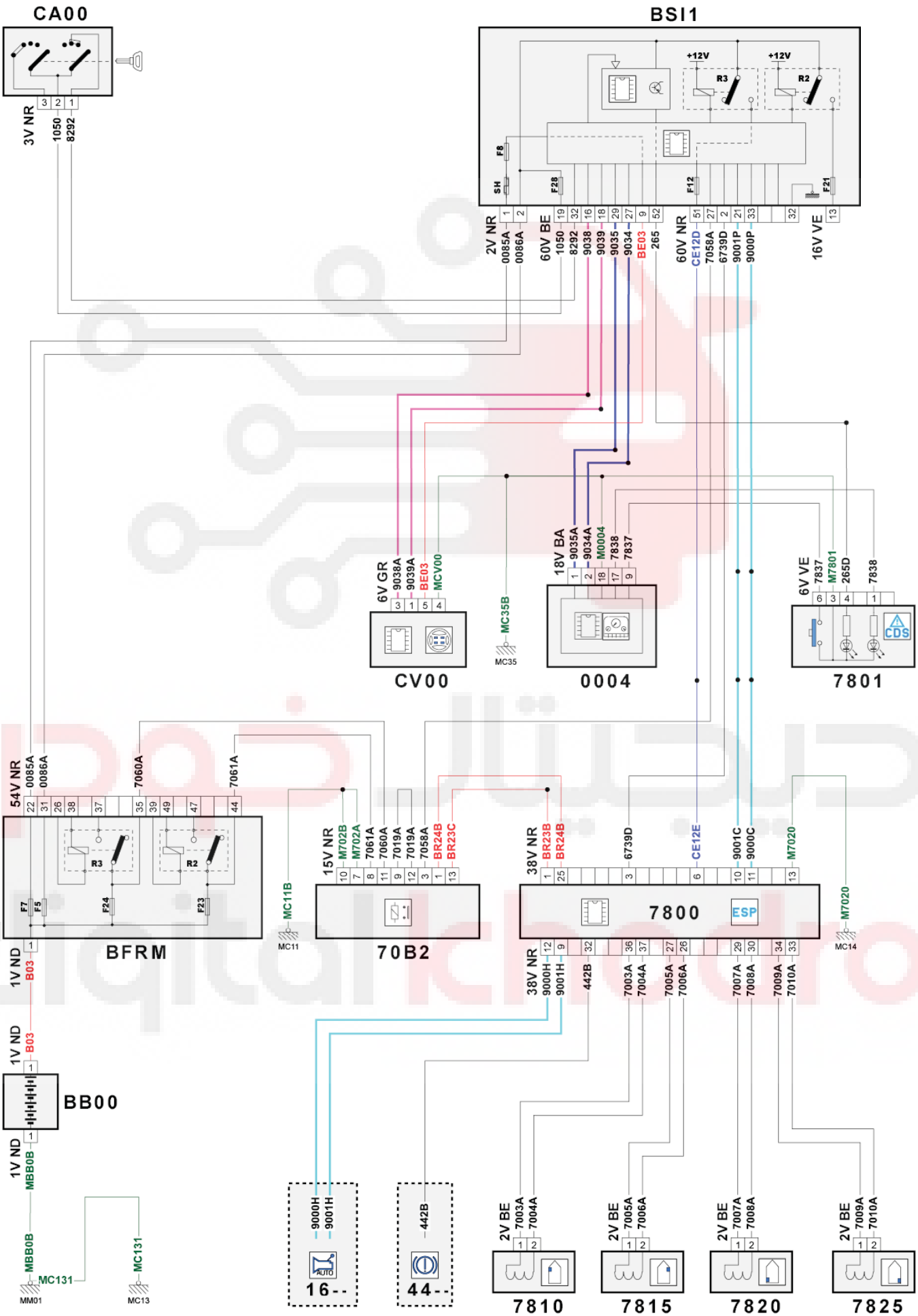

Stability Control (Without Brake Central Unit Supply Relay)

item code	description	information
0004	null	/ instrument panel
1630	null	/ automatic gearbox ECU
4410	null	brake fluid level switch
70B2	null	braking system supply relay
7800	null	calculateur controle de stabilite
7801	null	ESP cut-off switch
7810	null	front left wheel speed sensor
7815	null	front right wheel speed sensor
7820	null	rear left wheel speed sensor
7825	null	rear right wheel speed sensor
BB00	null	ancillaries battery
BFRM	null	engine fuse and relay box
BSI1	null	built-in systems interface
CA00	null	ignition switch
CV00	null	control under the steering wheel
E265	null	crimp one information (or equipotential 265) wire
E806B	null	crimp one information (or equipotential 806B) wire
E900A	null	crimp one information (or equipotential 276A) wire
E900B	null	crimp one information (or equipotential 900B) wire
E901A	null	crimp one information (or equipotential 901A) wire
E901B	null	crimp one information (or equipotential 901B) wire
E934	null	crimp one information (or equipotential 934) wire
E935	null	crimp one information (or equipotential 935) wire
E938	null	crimp one information (or equipotential 938) wire
E939	null	crimp one information (or equipotential 939) wire
EC12A	null	splice of an "ignition +" protected by fuse no. 12
EM11A	null	crimp earth (earth point number 11A)
EM35B	null	crimp earth (earth point number 35B)
MC11B	null	body earth point number 11B
MC13	null	body earth point number 13
MC14A	null	body earth point number 14
MC35	null	body earth point number 35
MM01A	null	engine earth point number 01A

Stability Control (With Brake Central Unit Supply Relay)

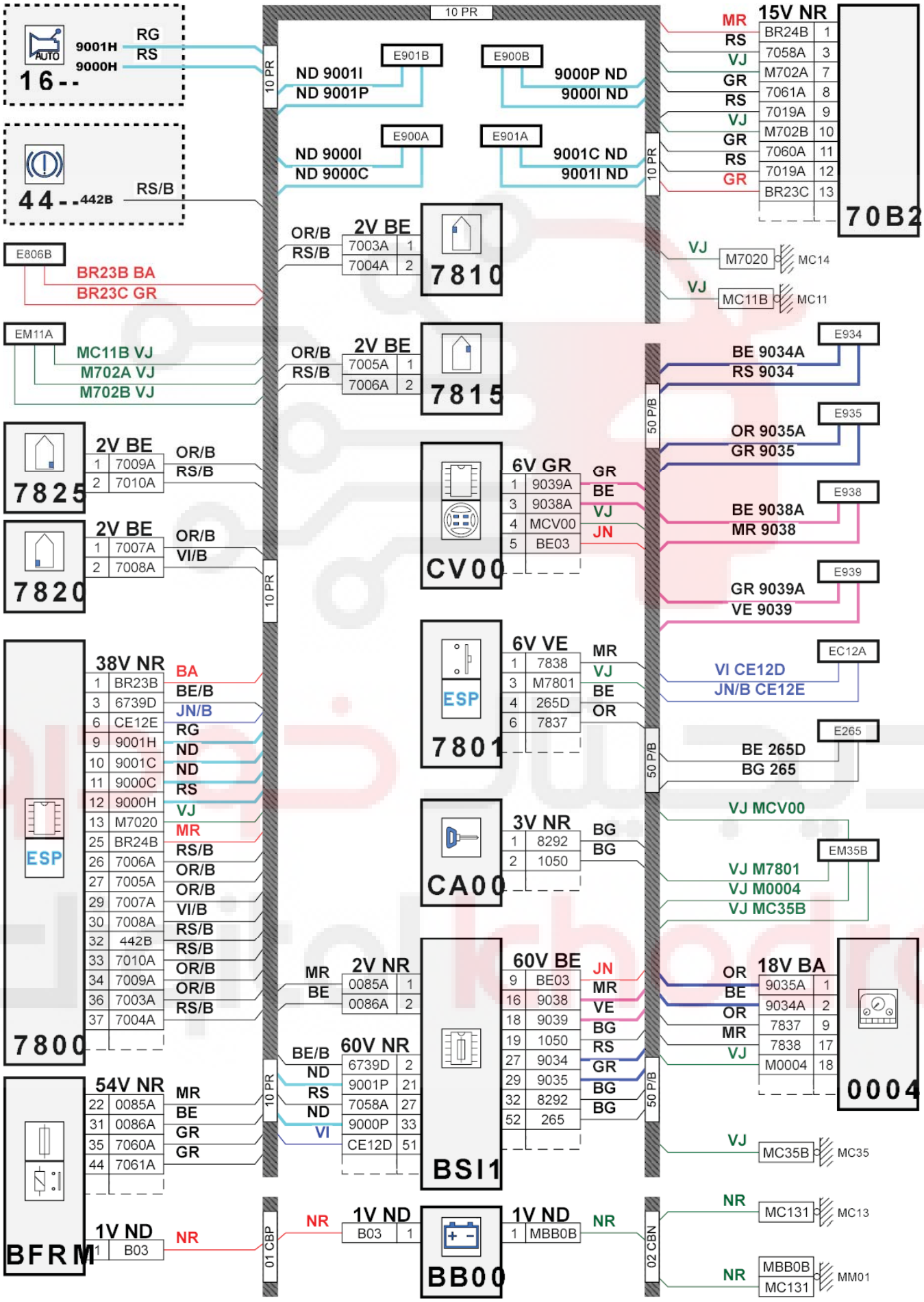

Stability Control (With Brake Central Unit Supply Relay)

item code	description	information
0004	null	/ instrument panel
1630	null	/ automatic gearbox ECU
4410	null	brake fluid level switch
70B2	null	braking system supply relay
7800	null	calculateur controle de stabilite
7801	null	ESP cut-off switch
7810	null	front left wheel speed sensor
7815	null	front right wheel speed sensor
7820	null	rear left wheel speed sensor
7825	null	rear right wheel speed sensor
BB00	null	ancillaries battery
BFRM	null	engine fuse and relay box
BSI1	null	built-in systems interface
CA00	null	ignition switch
CV00	null	control under the steering wheel
E265	null	crimp one information (or equipotential 265) wire
E806B	null	crimp one information (or equipotential 806B) wire
E900A	null	crimp one information (or equipotential 276A) wire
E900B	null	crimp one information (or equipotential 900B) wire
E901A	null	crimp one information (or equipotential 901A) wire
E901B	null	crimp one information (or equipotential 901B) wire
E934	null	crimp one information (or equipotential 934) wire
E935	null	crimp one information (or equipotential 935) wire
E938	null	crimp one information (or equipotential 938) wire
E939	null	crimp one information (or equipotential 939) wire
EC12A	null	splice of an "ignition +" protected by fuse no. 12
EM11A	null	crimp earth (earth point number 11A)
EM35B	null	crimp earth (earth point number 35B)
MC11B	null	body earth point number 11B
MC13	null	body earth point number 13
MC14A	null	body earth point number 14
MC35	null	body earth point number 35
MM01A	null	engine earth point number 01A

Cruise Control/Speed Limiter

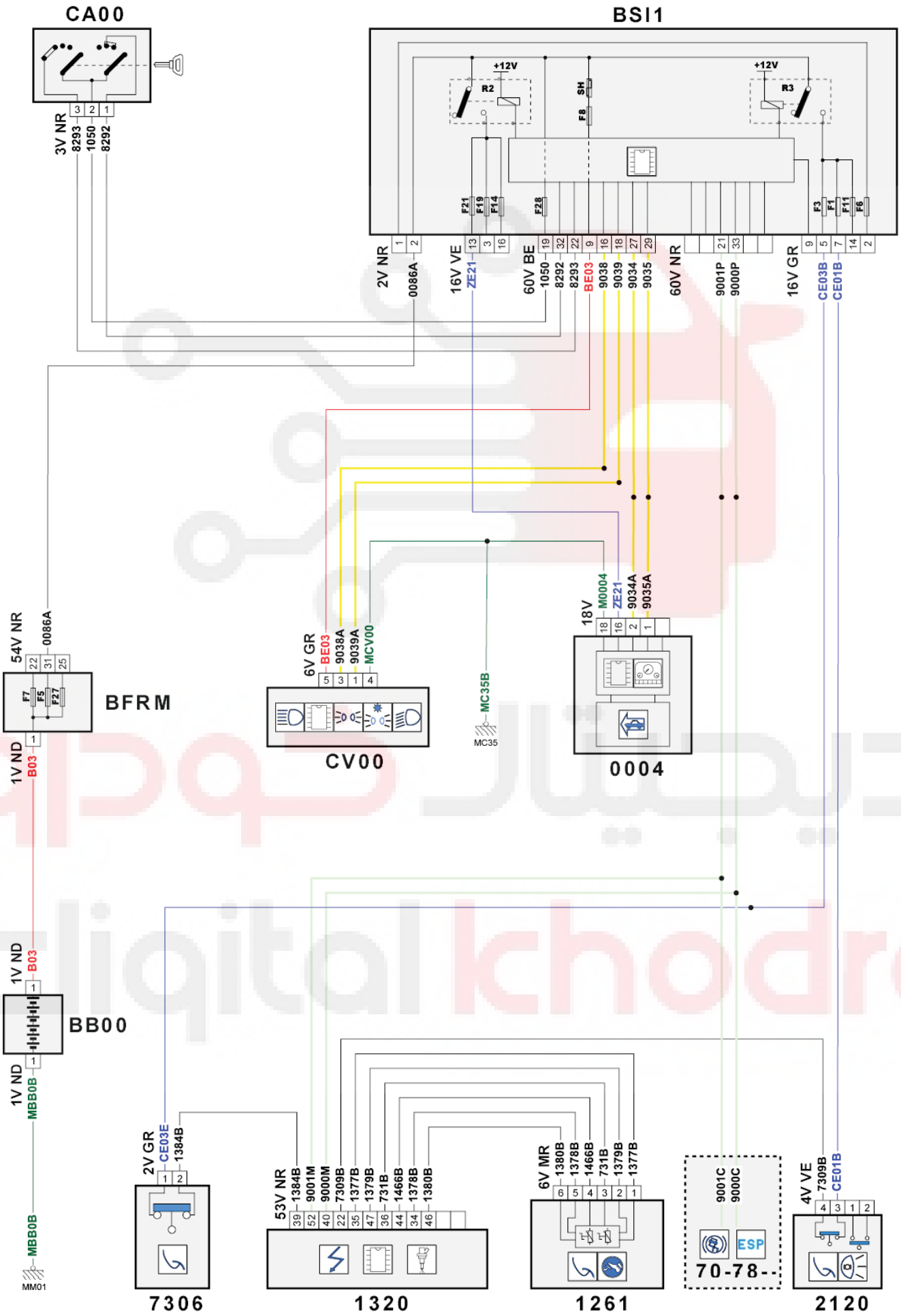

Cruise Control/Speed Limiter

item code	description	information
0004	null	/ instrument panel
1261	null	accelerator pedal position sensor /
1320	null	engine ECU /
2120	null	dual function brake switch /
7306	null	cruise control safety switch (clutch)
7800	null	calculateur controle de stabilite
BB00	null	ancillaries battery
BFRM	null	engine fuse and relay box
BSI1	null	built-in systems interface
CA00	null	ignition switch
CV00	null	control under the steering wheel
E900A	null	crimp one information (or equipotential 276A) wire
E900B	null	crimp one information (or equipotential 900B) wire
E901A	null	crimp one information (or equipotential 901A) wire
E901B	null	crimp one information (or equipotential 901B) wire
E934	null	crimp one information (or equipotential 934) wire
E935	null	crimp one information (or equipotential 935) wire
E938	null	crimp one information (or equipotential 938) wire
E939	null	crimp one information (or equipotential 939) wire
EC03A	null	splice of an "ignition +" protected by fuse no. 03A
EM35B	null	crimp earth (earth point number 35B)
MC35	null	body earth point number 35
MM01	null	engine earth point number 01

Cruise Control/Speed Limiter

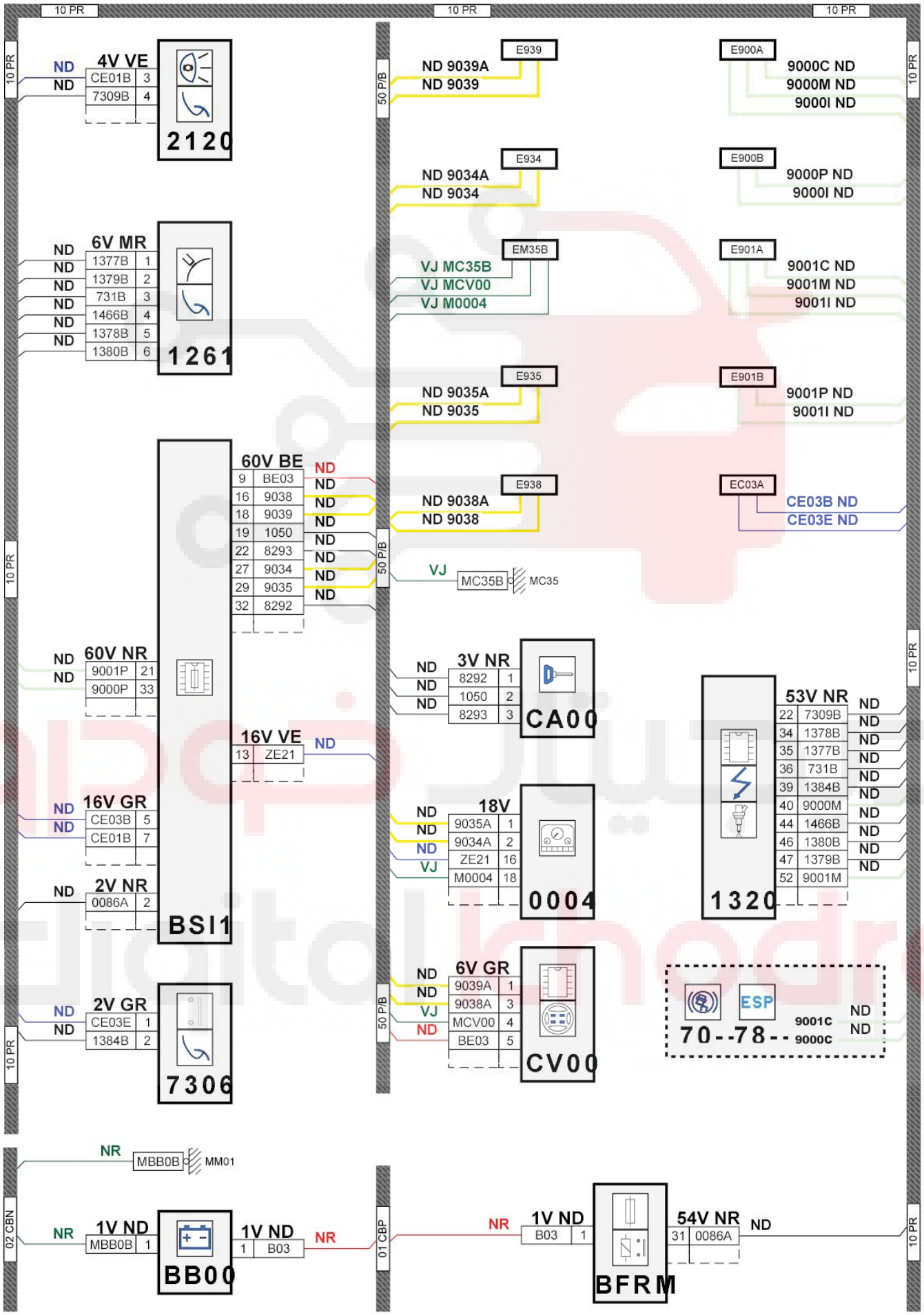

Cruise Control/Speed Limiter

item code	description	information
0004	null	/ instrument panel
1261	null	accelerator pedal position sensor /
1320	null	engine ECU /
2120	null	dual function brake switch /
7306	null	cruise control safety switch (clutch)
7800	null	calculateur controle de stabilite
BB00	null	ancillaries battery
BFRM	null	engine fuse and relay box
BSI1	null	built-in systems interface
CA00	null	ignition switch
CV00	null	control under the steering wheel
E900A	null	crimp one information (or equipotential 276A) wire
E900B	null	crimp one information (or equipotential 900B) wire
E901A	null	crimp one information (or equipotential 901A) wire
E901B	null	crimp one information (or equipotential 901B) wire
E934	null	crimp one information (or equipotential 934) wire
E935	null	crimp one information (or equipotential 935) wire
E938	null	crimp one information (or equipotential 938) wire
E939	null	crimp one information (or equipotential 939) wire
EC03A	null	splice of an "ignition +" protected by fuse no. 03A
EM35B	null	crimp earth (earth point number 35B)
MC35	null	body earth point number 35
MM01	null	engine earth point number 01

Parking Assistance

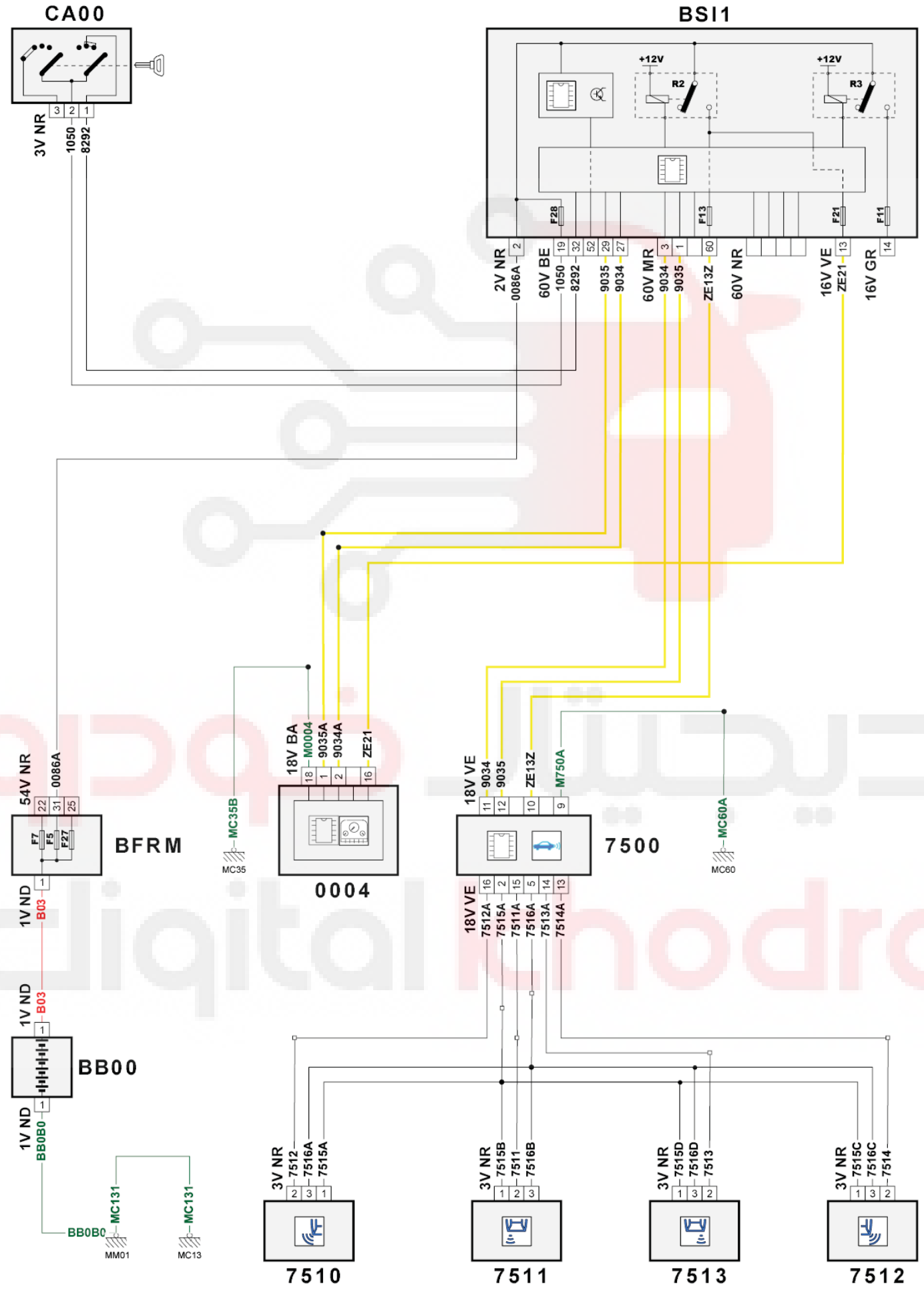

Parking Assistance

item code	description	information
0004	null	/ instrument panel
7500	null	Parking assistance ECU
7510	null	rear left outer parking assistance sensor /
7511	null	rear left inner parking assistance sensor /
7512	null	rear right outer parking assistance sensor /
7513	null	rear right inner parking assistance sensor /
BB00	null	ancillaries battery
BFRM	null	engine fuse and relay box
BSI1	null	built-in systems interface
CA00	null	ignition switch
E755	null	crimp one information (or equipotential 755) wire
E756	null	crimp one information (or equipotential 756) wire
E934	null	crimp one information (or equipotential 934) wire
E935	null	crimp one information (or equipotential 935) wire
EM35B	null	crimp earth (earth point number 35B)
EM60A	null	crimp earth (earth point number 60A)
MC13	null	body earth point number 13
MC35	null	body earth point number 35
MC60A	null	body earth point number 60
MM01	null	engine earth point number 01

Parking Assistance

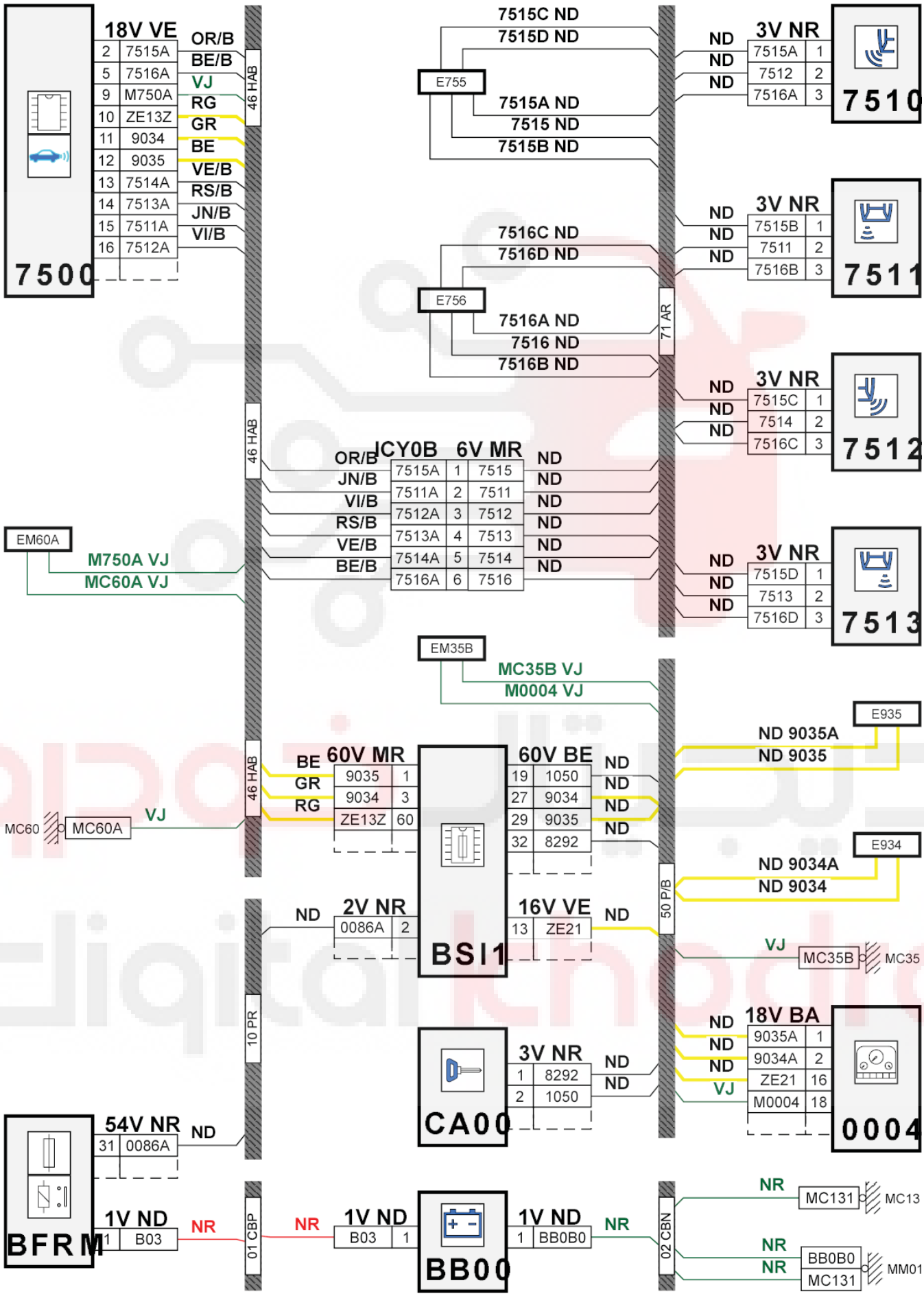

Parking Assistance

item code	description	information
0004	null	/ instrument panel
7500	null	Parking assistance ECU
7510	null	rear left outer parking assistance sensor /
7511	null	rear left inner parking assistance sensor /
7512	null	rear right outer parking assistance sensor /
7513	null	rear right inner parking assistance sensor /
BB00	null	ancillaries battery
BFRM	null	engine fuse and relay box
BSI1	null	built-in systems interface
CA00	null	ignition switch
E755	null	crimp one information (or equipotential 755) wire
E756	null	crimp one information (or equipotential 756) wire
E934	null	crimp one information (or equipotential 934) wire
E935	null	crimp one information (or equipotential 935) wire
EM35B	null	crimp earth (earth point number 35B)
EM60A	null	crimp earth (earth point number 60A)
MC13	null	body earth point number 13
MC35	null	body earth point number 35
MC60A	null	body earth point number 60
MM01	null	engine earth point number 01

Brake Servo

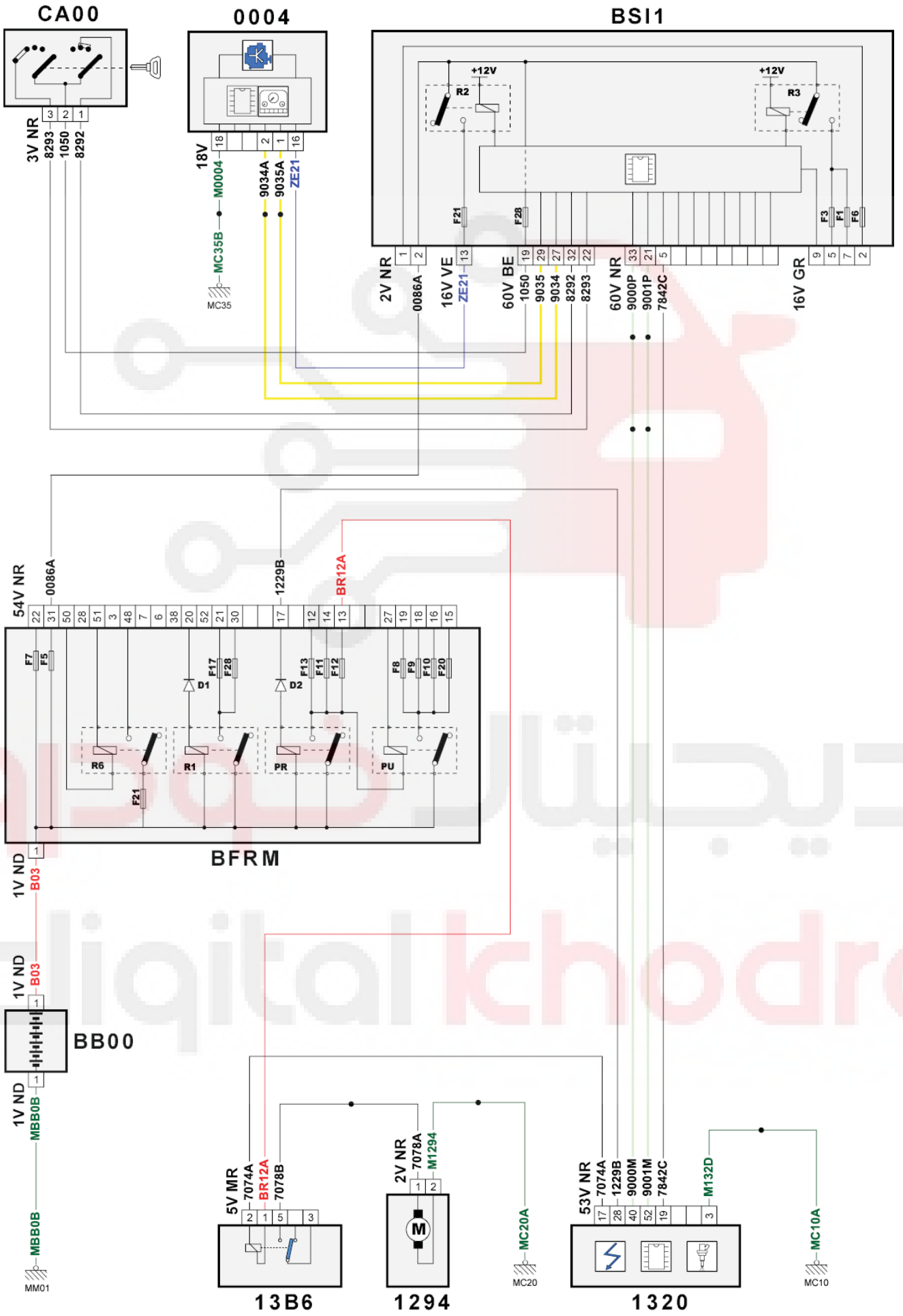
CA00
0004
BSI1
3V NR
8293
1050
8292
18V
M0004
MC35B
MC35
9034A
9035A
ZE21
+12V
R2
R3
F21
F28
F3
F1
F6
2V NR
0086A
16V VE
60V BE
1050
9035
9034
8292
8293
60V NR
9000P
9001P
7842C
16V GR
54V NR
1229B
BR12A
F7
F5
D1
D2
F17
F13
F11
F12
F8
F9
F10
F20
R6
R1
PR
PU
BFRM
1V ND
B03
BB00
MBB0B
MM01
5V MR
7074A
7078B
2V NR
7078A
M1294
MC20A
MC20
53V NR
1229B
9000M
9001M
M132D
MC10A
MC10
13B6
1294
1320
D3CZDJ0R

Brake Servo

item code	description	information
0004	null	/ instrument panel
1294	null	/ vacuum pump
1320	null	engine ECU /
13B6	null	vacuum pump control relay
BB00	null	ancillaries battery
BFRM	null	engine fuse and relay box
BSI1	null	built-in systems interface
CA00	null	ignition switch
E806A	null	crimp one information (or equipotential 806A) wire
E900A	null	crimp one information (or equipotential 276A) wire
E900B	null	crimp one information (or equipotential 900B) wire
E901A	null	crimp one information (or equipotential 901A) wire
E901B	null	crimp one information (or equipotential 901B) wire
E934	null	crimp one information (or equipotential 934) wire
E935	null	crimp one information (or equipotential 935) wire
EM10B	null	crimp earth (earth point number 10B)
EM20A	null	crimp earth (earth point number 20A)
EM35B	null	crimp earth (earth point number 35B)
MC10A	null	body earth point number 10A
MC20A	null	body earth point number 20A
MC35	null	body earth point number 35
MM01	null	engine earth point number 01

Brake Servo

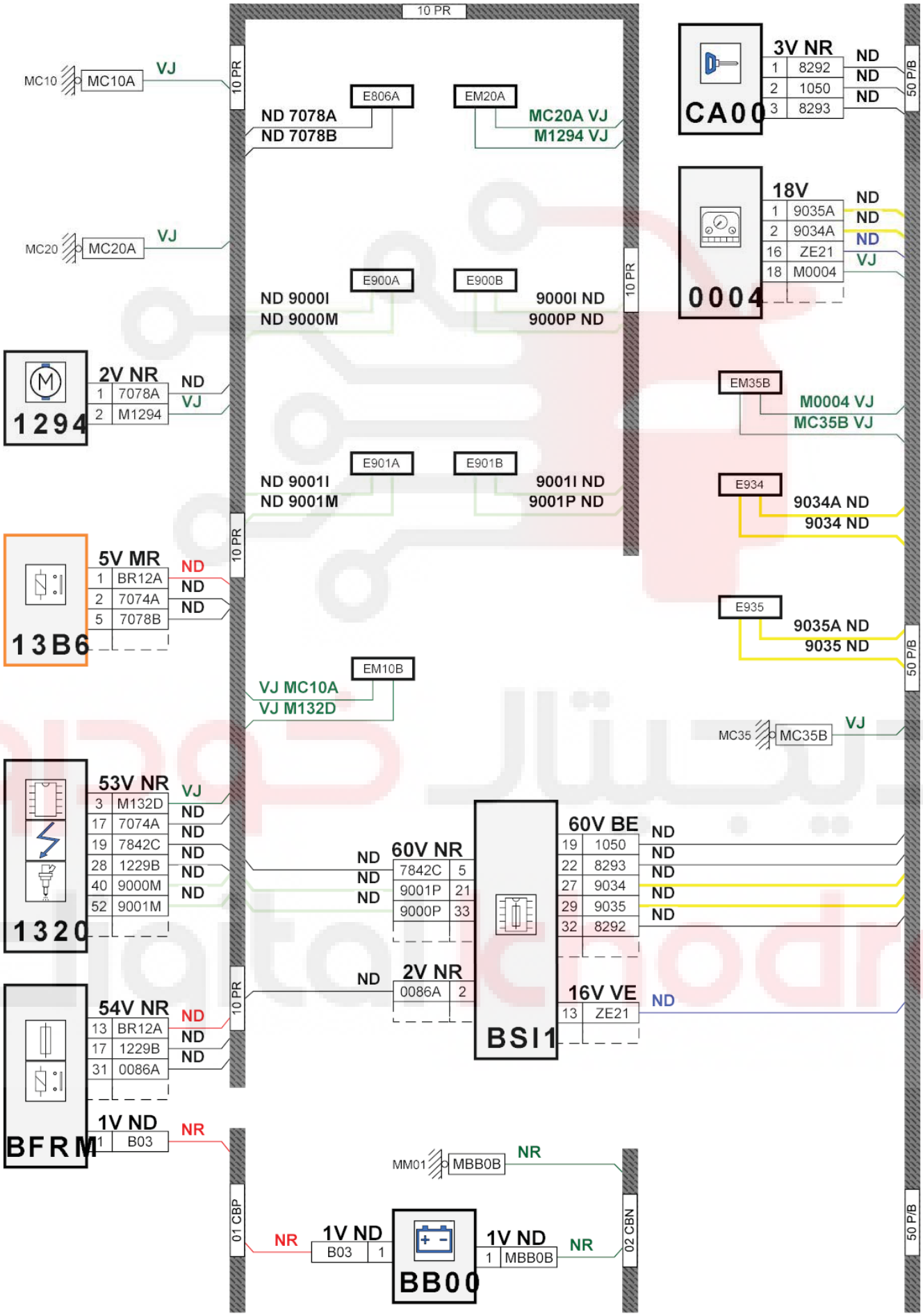
10 PR
MC10
MC10A
VJ
MC20
MC20A
VJ
E806A
ND 7078A
ND 7078B
EM20A
MC20A VJ
M1294 VJ
E900A
ND 9000I
ND 9000M
E900B
9000I ND
9000P ND
E901A
ND 9001I
ND 9001M
E901B
9001I ND
9001P ND
EM10B
VJ MC10A
VJ M132D
1294
2V NR
1 7078A ND
2 M1294 VJ
13B6
5V MR
1 BR12A ND
2 7074A ND
5 7078B ND
1320
53V NR
3 M132D VJ
17 7074A ND
19 7842C ND
28 1229B ND
40 9000M ND
52 9001M ND
BFRM
54V NR
13 BR12A ND
17 1229B ND
31 0086A ND
1V ND
1 B03 NR
60V NR
7842C 5
9001P 21
9000P 33
2V NR
0086A 2
BSI1
60V BE
19 1050 ND
22 8293 ND
27 9034 ND
29 9035 ND
32 8292 ND
16V VE
13 ZE21 ND
CA00
3V NR
1 8292 ND
2 1050 ND
3 8293 ND
0004
18V
1 9035A ND
2 9034A ND
16 ZE21 ND
18 M0004 VJ
EM35B
M0004 VJ
MC35B VJ
E934
9034A ND
9034 ND
E935
9035A ND
9035 ND
MC35
MC35B
VJ
50 P/B
MM01
MBB0B
NR
01 CBP
NR
1V ND
B03 1
BB00
1V ND
1 MBB0B
NR
02 CBN
50 P/B

Brake Servo

item code	description	information
0004	null	/ instrument panel
1294	null	/ vacuum pump
1320	null	engine ECU /
13B6	null	vacuum pump control relay
BB00	null	ancillaries battery
BFRM	null	engine fuse and relay box
BSI1	null	built-in systems interface
CA00	null	ignition switch
E806A	null	crimp one information (or equipotential 806A) wire
E900A	null	crimp one information (or equipotential 276A) wire
E900B	null	crimp one information (or equipotential 900B) wire
E901A	null	crimp one information (or equipotential 901A) wire
E901B	null	crimp one information (or equipotential 901B) wire
E934	null	crimp one information (or equipotential 934) wire
E935	null	crimp one information (or equipotential 935) wire
EM10B	null	crimp earth (earth point number 10B)
EM20A	null	crimp earth (earth point number 20A)
EM35B	null	crimp earth (earth point number 35B)
MC10A	null	body earth point number 10A
MC20A	null	body earth point number 20A
MC35	null	body earth point number 35
MM01	null	engine earth point number 01

Power Steering (Without Brake Central Unit Supply Relay)

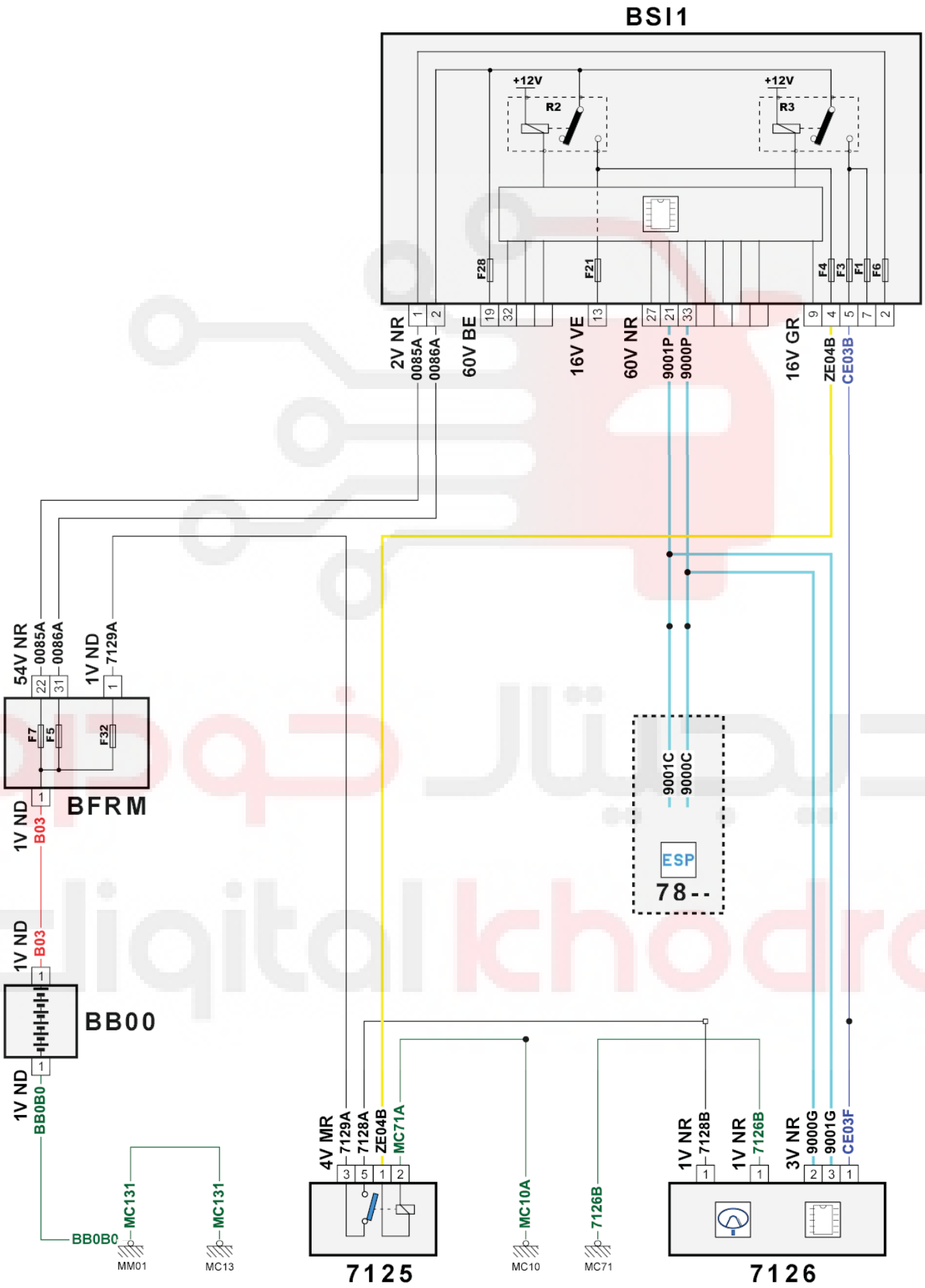

Power Steering (Without Brake Central Unit Supply Relay)

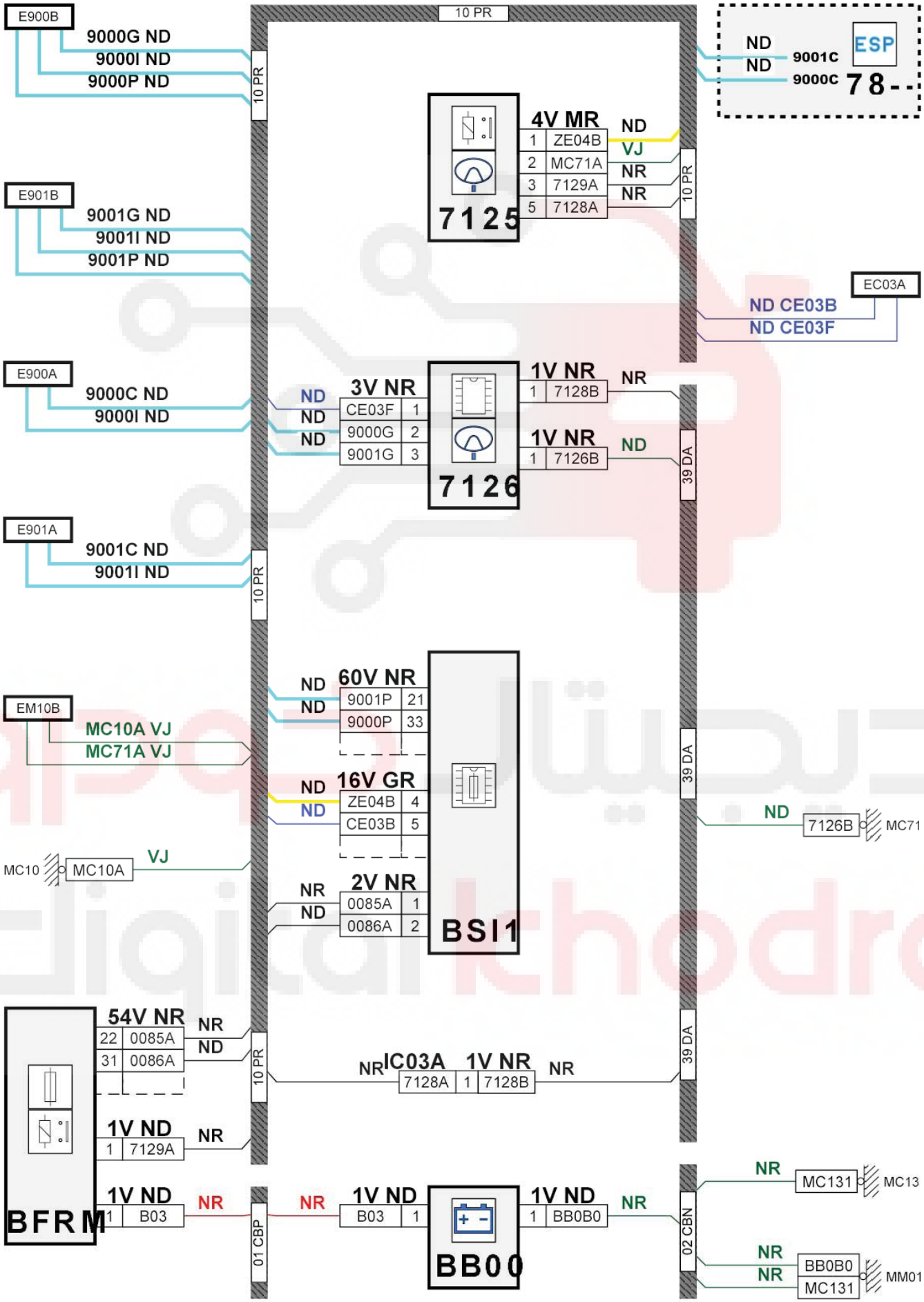

Power Steering (Without Brake Central Unit Supply Relay)

item code	description	information
7125	null	power steering power relay
7126	null	electric power steering ECU /
7800	null	calculateur controle de stabilite
BB00	null	ancillaries battery
BFRM	null	engine fuse and relay box
BSI1	null	built-in systems interface
E900A	null	crimp one information (or equipotential 276A) wire
E900B	null	crimp one information (or equipotential 900B) wire
E901A	null	crimp one information (or equipotential 901A) wire
E901B	null	crimp one information (or equipotential 901B) wire
EC03A	null	splice of an "ignition +" protected by fuse no. 03A
EM10B	null	crimp earth (earth point number 10B)
MC10A	null	body earth point number 10A
MC13	null	body earth point number 13
MC71B	null	body earth point number 71
MM01	null	engine earth point number 01

Power Steering

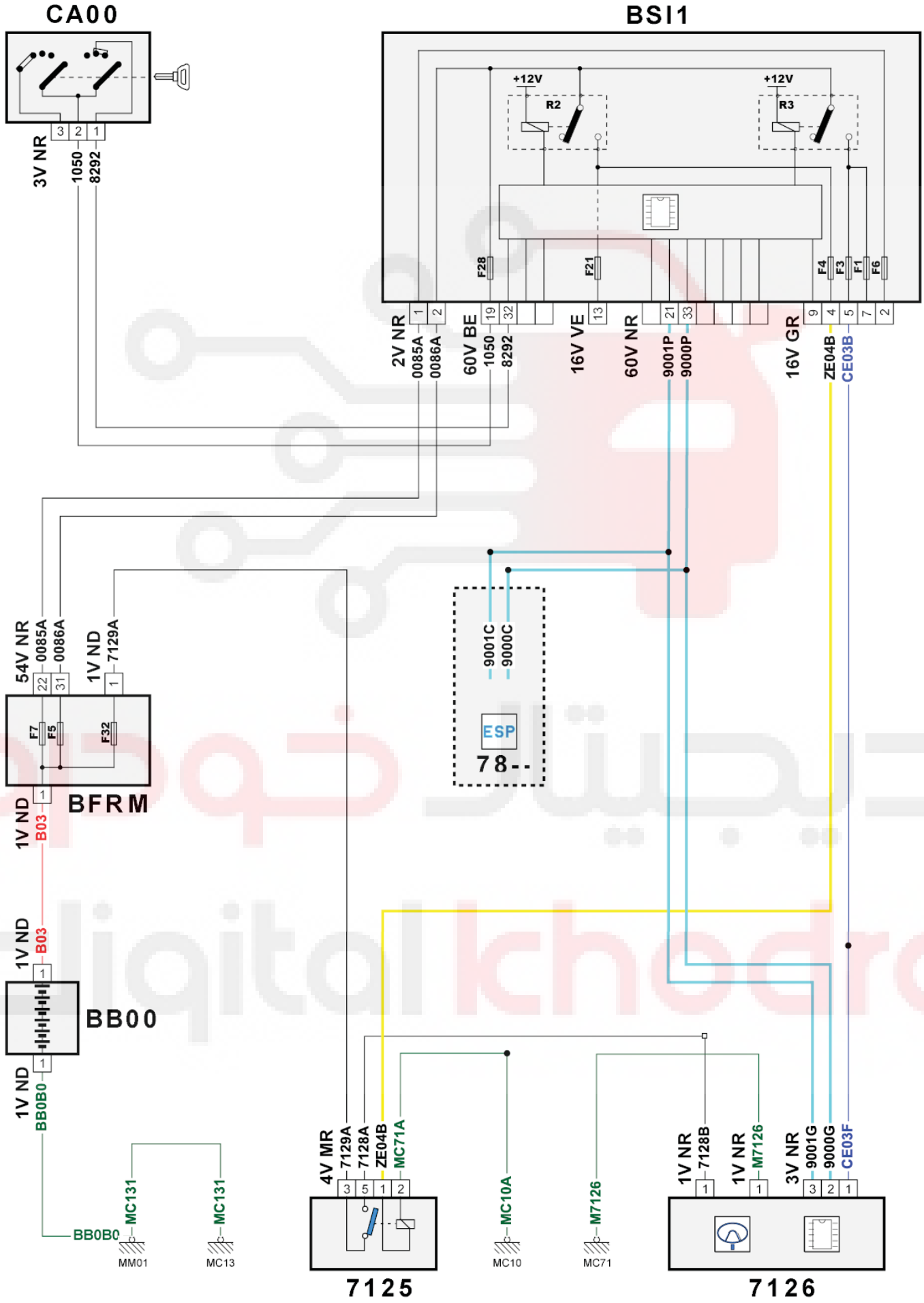

D3CZHJVR

Power Steering

item code	description	information
7125	null	power steering power relay
7126	null	electric power steering ECU /
7800	null	calculateur controle de stabilite
BB00	null	ancillaries battery
BFRM	null	engine fuse and relay box
BSI1	null	built-in systems interface
CA00	null	ignition switch
E900A	null	crimp one information (or equipotential 276A) wire
E900B	null	crimp one information (or equipotential 900B) wire
E901A	null	crimp one information (or equipotential 901A) wire
E901B	null	crimp one information (or equipotential 901B) wire
EC03A	null	splice of an "ignition +" protected by fuse no. 03A
EM10B	null	crimp earth (earth point number 10B)
MC10A	null	body earth point number 10A
MC13	null	body earth point number 13
MC71B	null	body earth point number 71
MM01	null	engine earth point number 01

Power Steering (With Brake Central Unit Supply Relay)

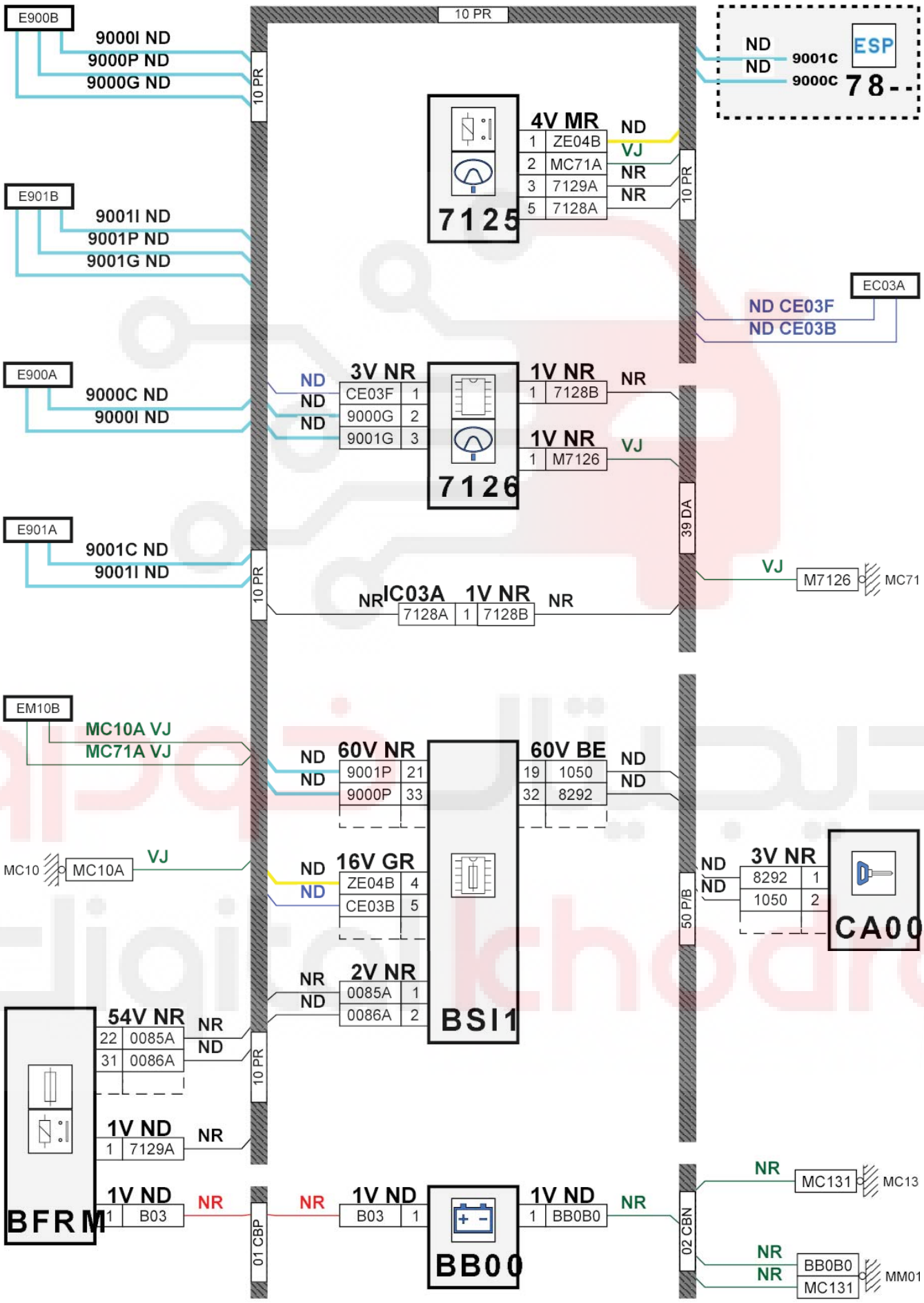

Power Steering (With Brake Central Unit Supply Relay)

item code	description	information
7125	null	power steering power relay
7126	null	electric power steering ECU /
7800	null	calculateur controle de stabilite
BB00	null	ancillaries battery
BFRM	null	engine fuse and relay box
BSI1	null	built-in systems interface
CA00	null	ignition switch
E900A	null	crimp one information (or equipotential 276A) wire
E900B	null	crimp one information (or equipotential 900B) wire
E901A	null	crimp one information (or equipotential 901A) wire
E901B	null	crimp one information (or equipotential 901B) wire
EC03A	null	splice of an "ignition +" protected by fuse no. 03A
EM10B	null	crimp earth (earth point number 10B)
MC10A	null	body earth point number 10A
MC13	null	body earth point number 13
MC71B	null	body earth point number 71
MM01	null	engine earth point number 01

Under Inflation Detection

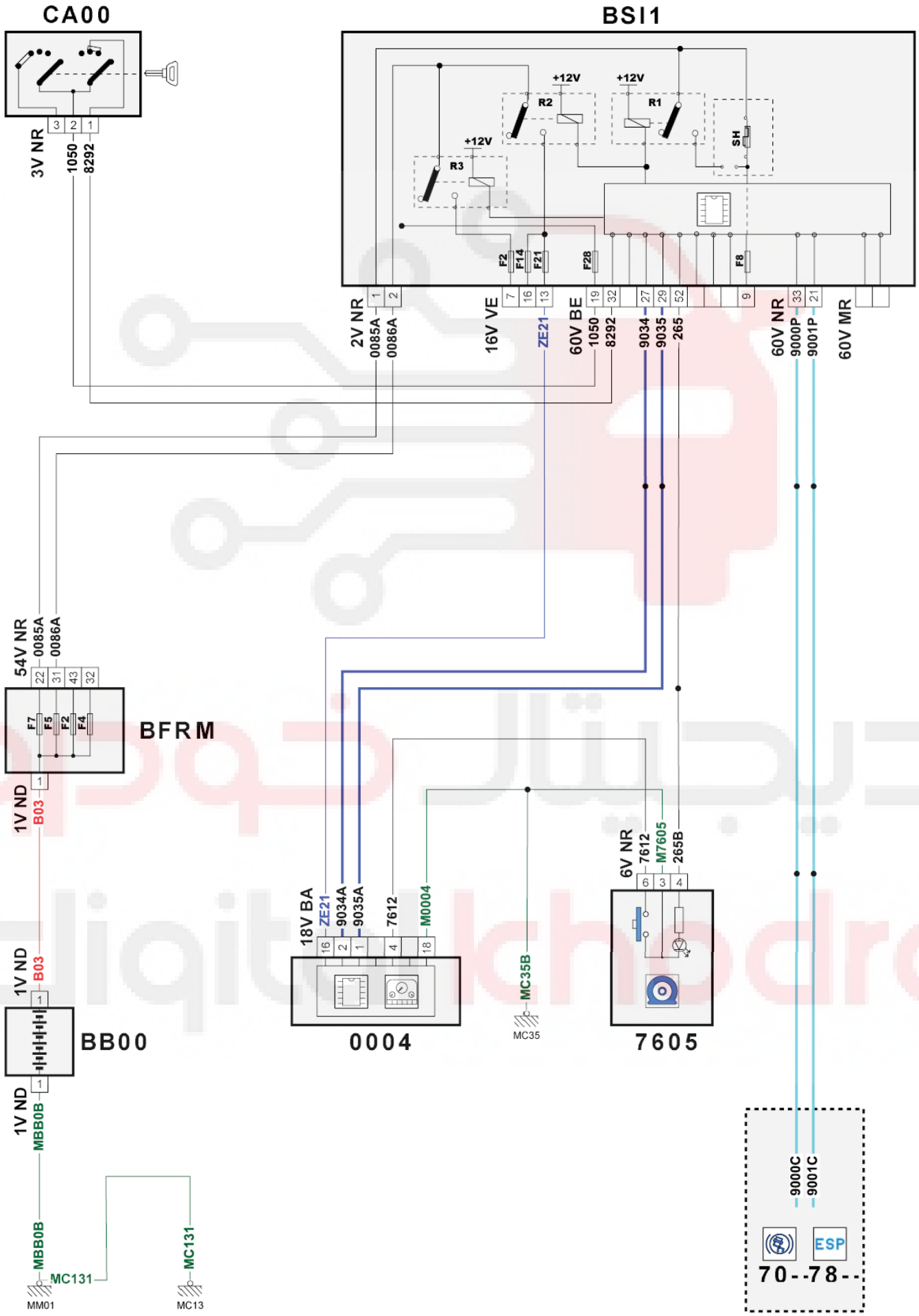

Under Inflation Detection

item code	description	information
0004	null	/ instrument panel
7605	null	tyre under-inflation detection reinitialisation switch
7800	null	calculateur controle de stabilite
BB00	null	ancillaries battery
BFRM	null	engine fuse and relay box
BSI1	null	built-in systems interface
CA00	null	ignition switch
E265	null	crimp one information (or equipotential 265) wire
E900A	null	crimp one information (or equipotential 276A) wire
E900B	null	crimp one information (or equipotential 900B) wire
E901A	null	crimp one information (or equipotential 901A) wire
E901B	null	crimp one information (or equipotential 901B) wire
E934	null	crimp one information (or equipotential 934) wire
E935	null	crimp one information (or equipotential 935) wire
EM35B	null	crimp earth (earth point number 35B)
MC13	null	body earth point number 13
MC35	null	body earth point number 35
MM01A	null	engine earth point number 01A

Multiplexed BODY CAN Interconnection

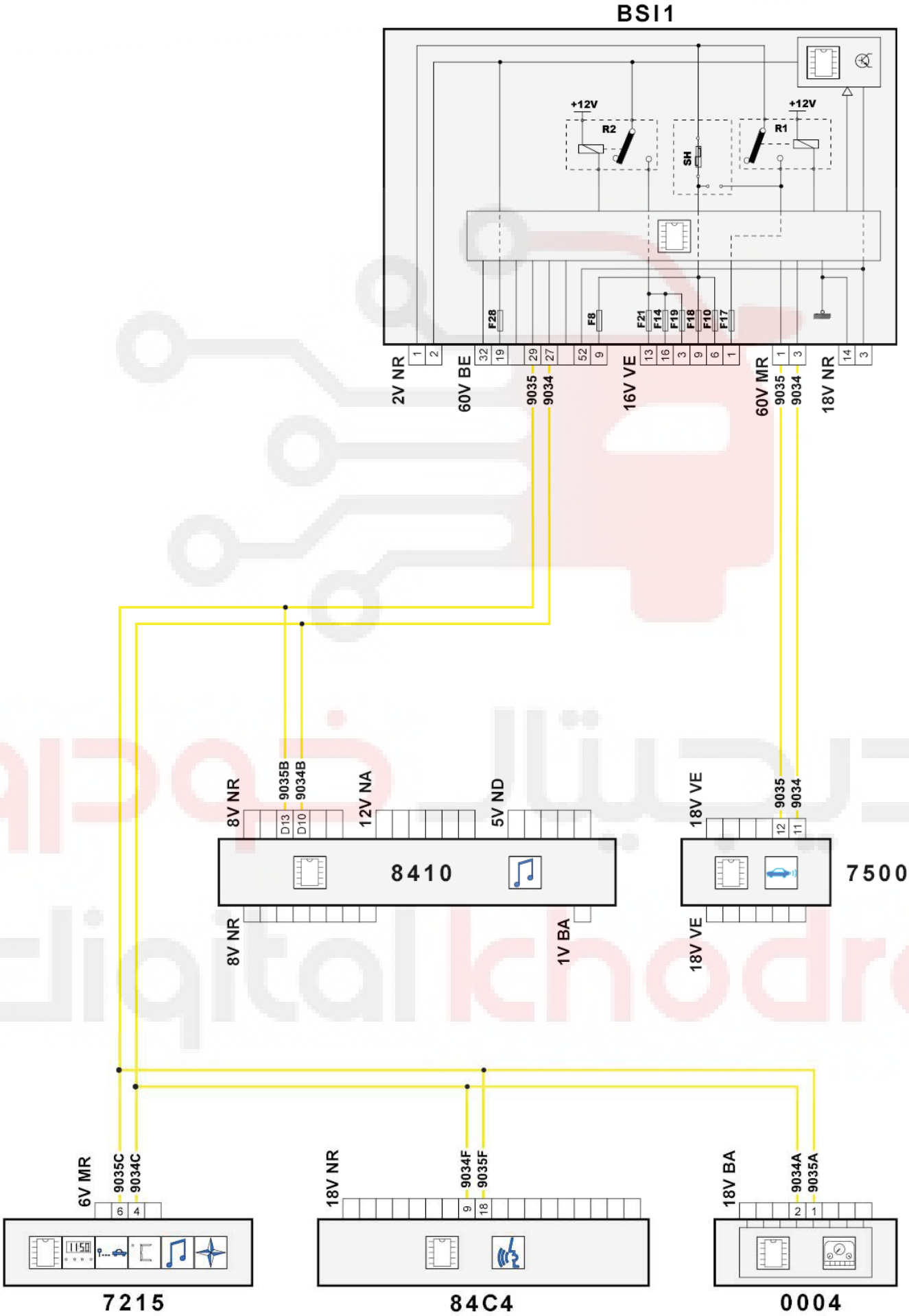

Multiplexed COMFORT CAN Interconnection

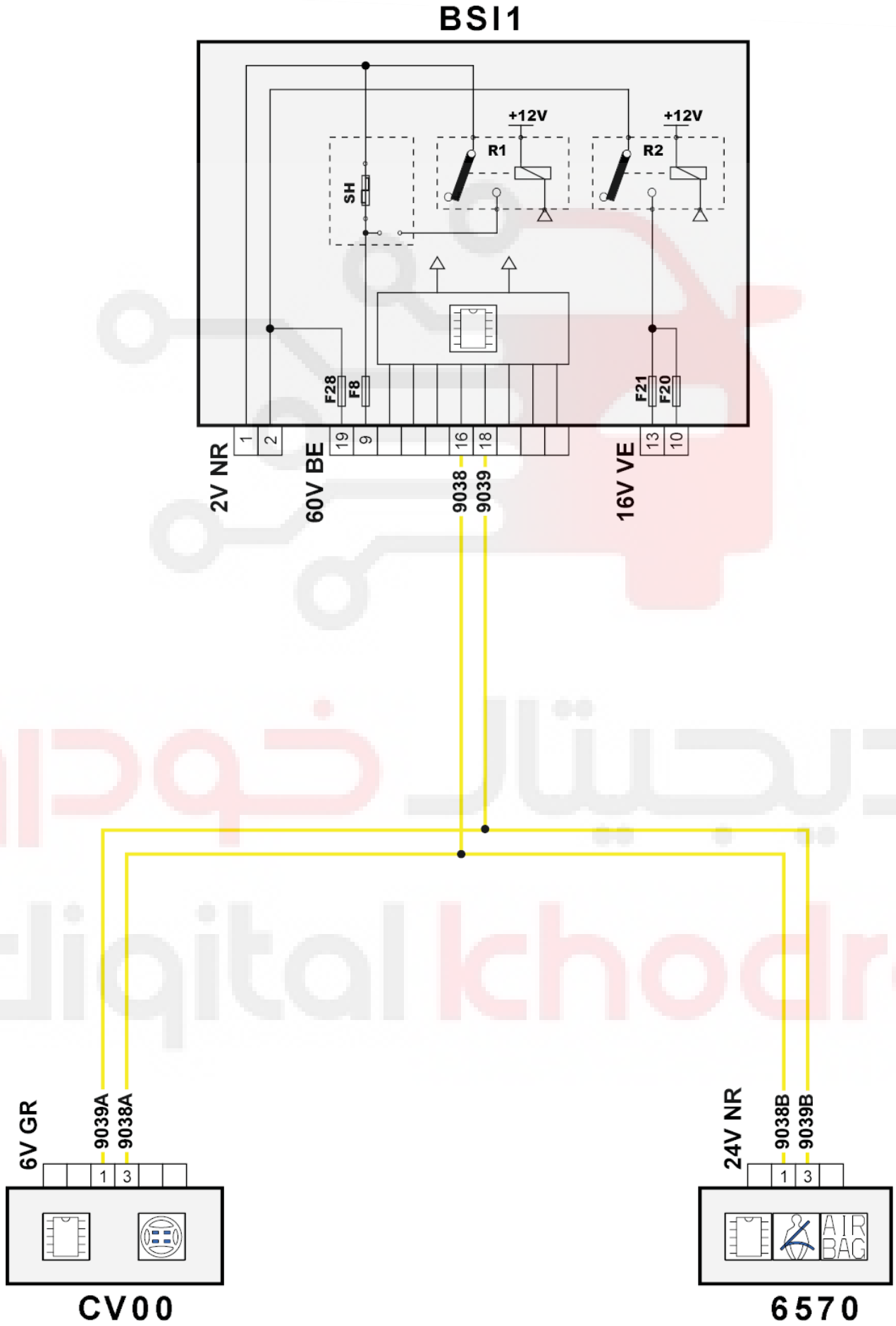

Electrical Mirrors

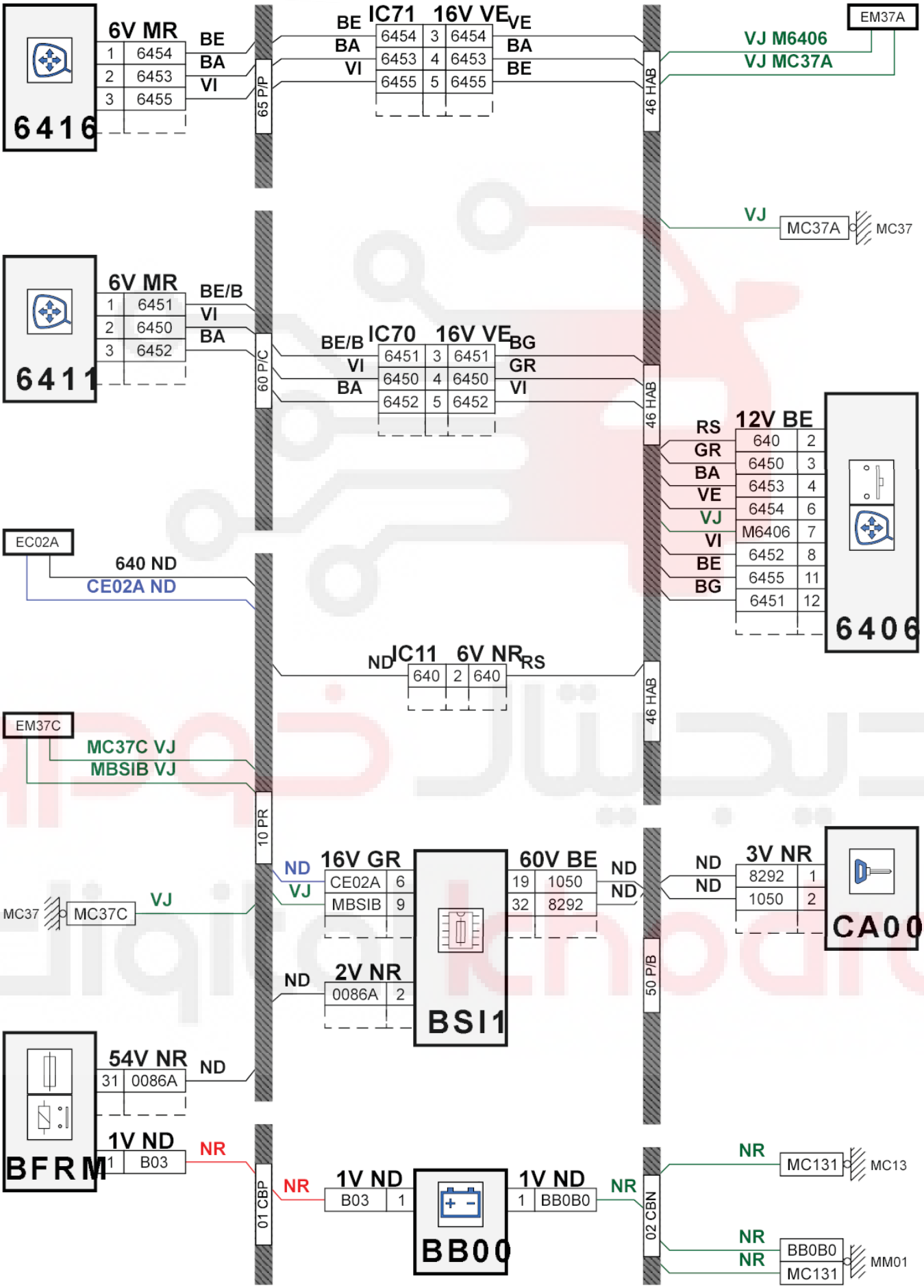

Electrical Mirrors

item code	description	information
6406	null	rear view mirror control
6411	null	left-hand exterior rear view mirror
6416	null	right-hand exterior mirror
BB00	null	ancillaries battery
BFRM	null	engine fuse and relay box
BSI1	null	built-in systems interface
CA00	null	ignition switch
EC02A	null	splice of an "ignition +" protected by fuse no. 02
EM37A	null	crimp earth (earth point number 37A)
EM37C	null	crimp earth (earth point number 37C)
MC13	null	body earth point number 13
MC37A	null	body earth point number 37A
MC37C	null	body earth point number 37
MM01	null	engine earth point number 01

دیجیتال خودرو
digital khodro

Electrical Mirrors

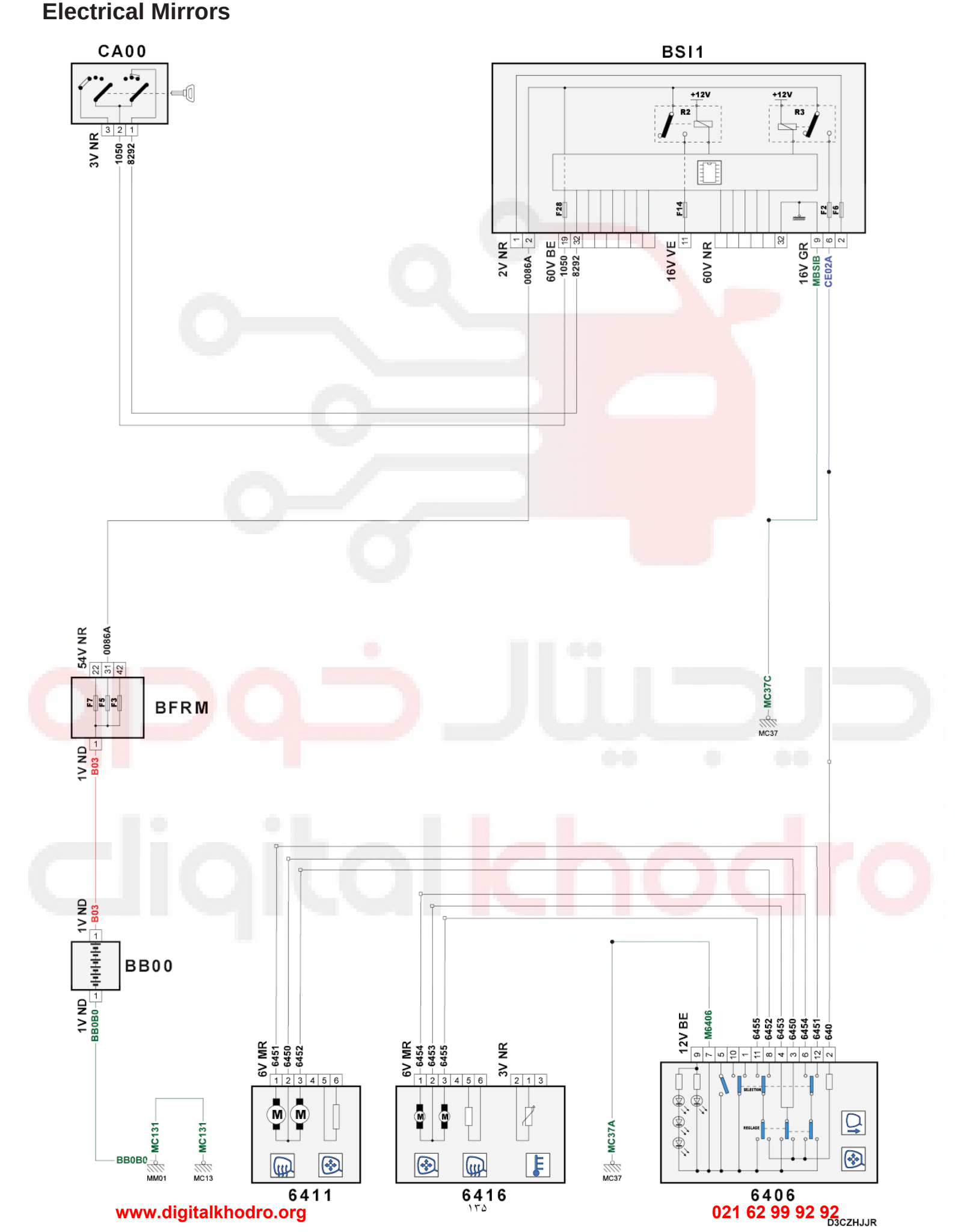

Passenger Compartment / Closed Compartment Lighting

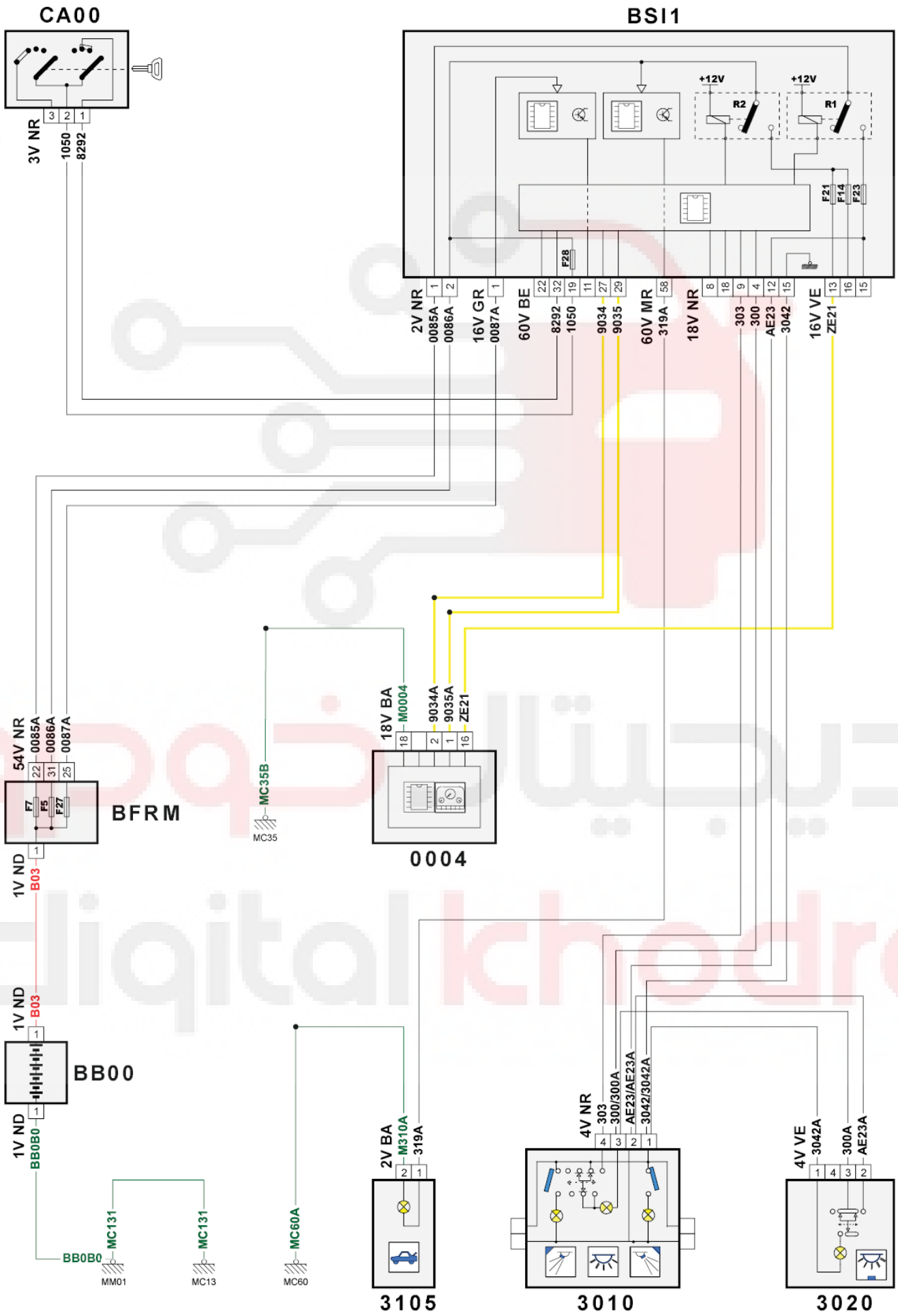

Passenger Compartment / Closed Compartment Lighting

item code	description	information
0004	null	/ instrument panel
3010	null	front interior lamp
3020	null	rear courtesy lamp
3105	null	boot (or tailgate) light
BB00	null	ancillaries battery
BFRM	null	engine fuse and relay box
BSI1	null	built-in systems interface
CA00	null	ignition switch
E934	null	crimp one information (or equipotential 934) wire
E935	null	crimp one information (or equipotential 935) wire
EM35B	null	crimp earth (earth point number 35B)
EM60A	null	crimp earth (earth point number 60A)
MC13	null	body earth point number 13
MC35	null	body earth point number 35
MC60A	null	body earth point number 60
MM01	null	engine earth point number 01

Passenger Compartment / Closed Compartment Lighting

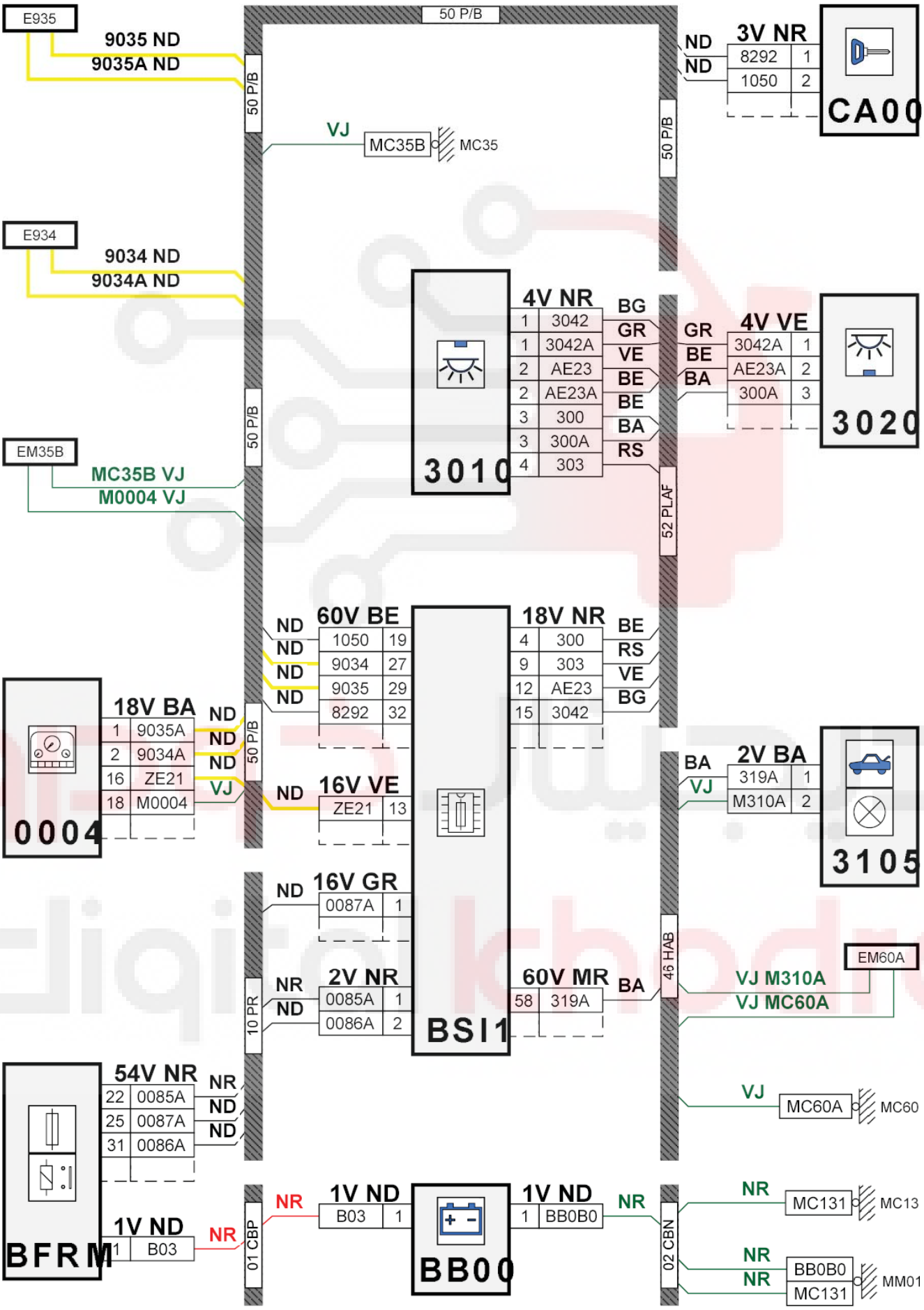

Passenger Compartment / Closed Compartment Lighting

item code	description	information
0004	null	/ instrument panel
3010	null	front interior lamp
3020	null	rear courtesy lamp
3105	null	boot (or tailgate) light
BB00	null	ancillaries battery
BFRM	null	engine fuse and relay box
BSI1	null	built-in systems interface
CA00	null	ignition switch
E934	null	crimp one information (or equipotential 934) wire
E935	null	crimp one information (or equipotential 935) wire
EM35B	null	crimp earth (earth point number 35B)
EM60A	null	crimp earth (earth point number 60A)
MC13	null	body earth point number 13
MC35	null	body earth point number 35
MC60A	null	body earth point number 60
MM01	null	engine earth point number 01

Brake Lamps

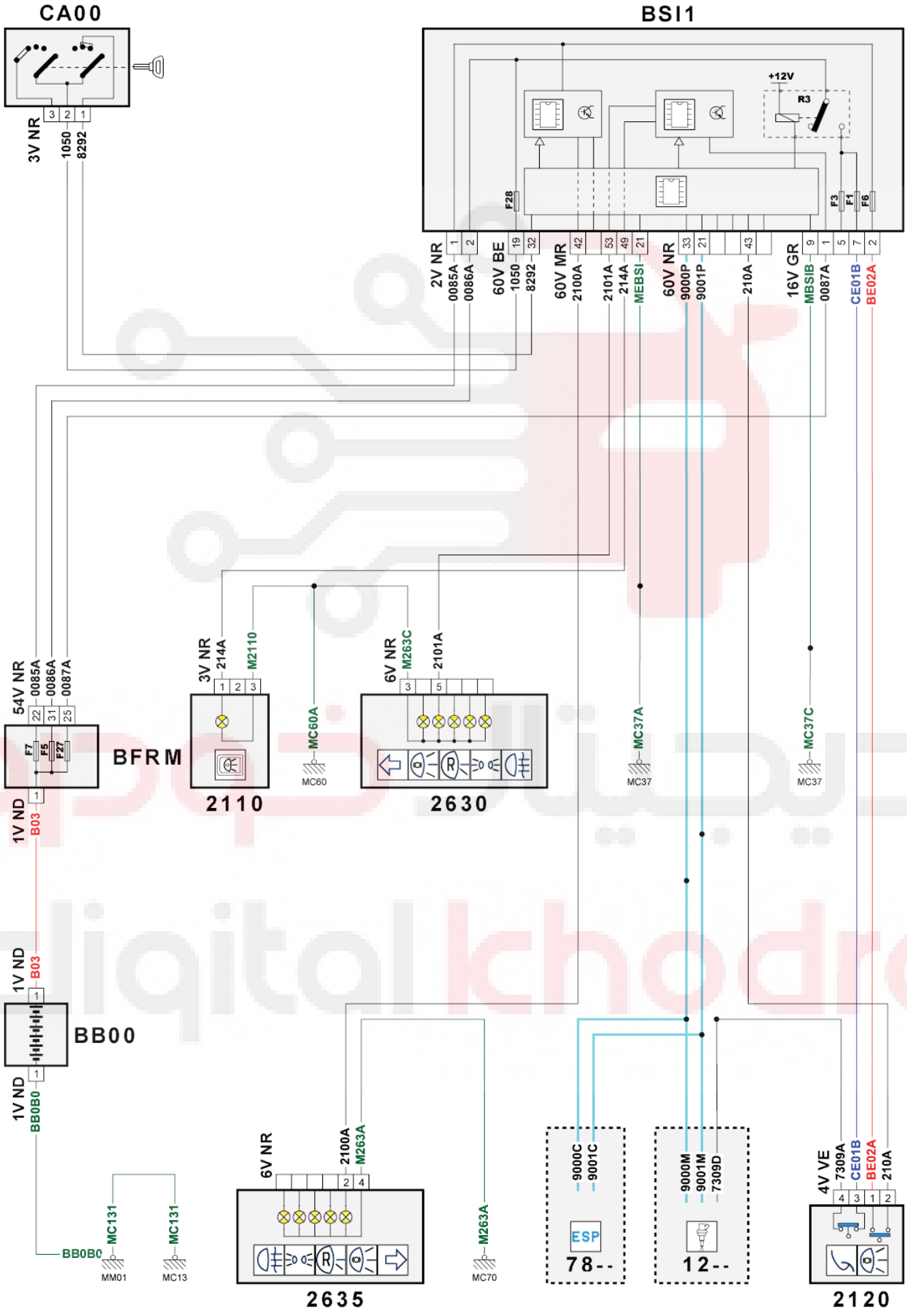
CA00
BSI1
+12V
R3
F28
F3
F1
F6
3V NR
1050
8292
2V NR
0085A
0086A
60V BE
1050
8292
60V MR
2100A
2101A
214A
MEBSI
60V NR
9000P
9001P
210A
16V GR
MBSIB
0087A
CE01B
BE02A
54V NR
0085A
0086A
0087A
F7
F5
F27
BFRM
1V ND
B03
3V NR
214A
M2110
MC60A
MC60
2110
6V NR
M263C
2101A
2630
MC37A
MC37
MC37C
MC37
1V ND
B03
BB00
1V ND
BB0B0
BB0B0
MC131
MC131
MM01
MC13
6V NR
2100A
M263A
2635
M263A
MC70
9000C
9001C
ESP
78--
9000M
9001M
7309D
12--
4V VE
7309A
CE01B
BE02A
210A
2120
D3CZHHMR

Brake Lamps

item code	description	information
1320	null	engine ECU /
2110	null	additional brake lamp
2120	null	dual function brake switch /
2630	null	rear left lamp on body
2635	null	rear right lamp on body
7800	null	calculateur controle de stabilite
BB00	null	ancillaries battery
BFRM	null	engine fuse and relay box
BSI1	null	built-in systems interface
CA00	null	ignition switch
E703A	null	crimp one information (or equipotential 703) wire
E900A	null	crimp one information (or equipotential 276A) wire
E900B	null	crimp one information (or equipotential 900B) wire
E901A	null	crimp one information (or equipotential 901A) wire
E901B	null	crimp one information (or equipotential 901B) wire
EM37A	null	crimp earth (earth point number 37A)
EM37C	null	crimp earth (earth point number 37C)
EM60A	null	crimp earth (earth point number 60A)
MC13	null	body earth point number 13
MC37A	null	body earth point number 37A
MC37C	null	body earth point number 37
MC60A	null	body earth point number 60
MC70A	null	body earth point number 70A
MM01	null	engine earth point number 01

Brake Lamps

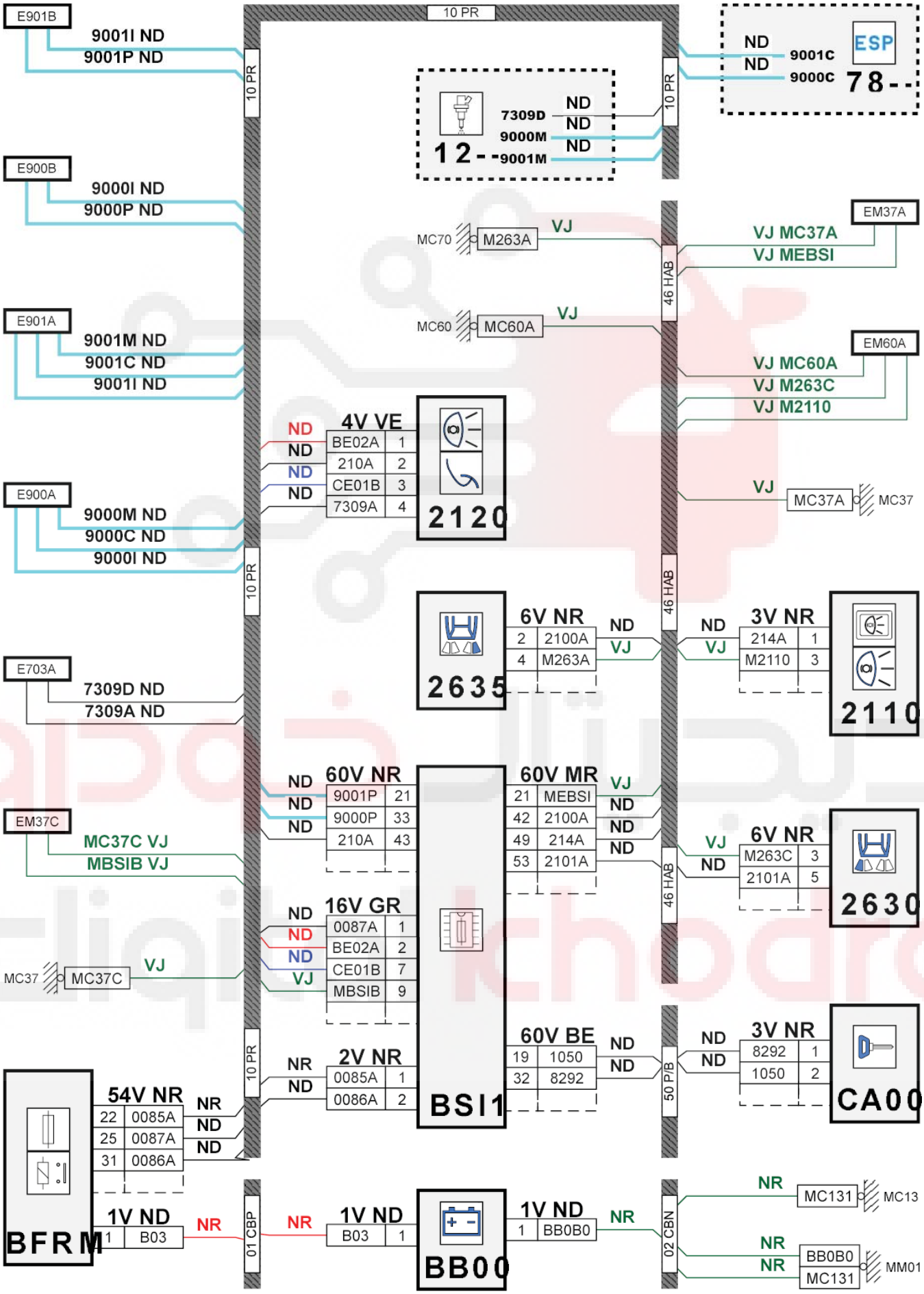
E901B
9001I ND
9001P ND
E900B
9000I ND
9000P ND
E901A
9001M ND
9001C ND
9001I ND
E900A
9000M ND
9000C ND
9000I ND
E703A
7309D ND
7309A ND
EM37C
MC37C VJ
MBSIB VJ
MC37
MC37C
VJ
BFRM
54V NR
22 0085A
25 0087A
31 0086A
NR
ND
ND
1V ND
1 B03
NR
10 PR
01 CBP
12
7309D ND
9000M ND
9001M ND
ESP
78
9001C ND
9000C ND
MC70
M263A
VJ
MC60
MC60A
VJ
EM37A
VJ MC37A
VJ MEBSI
EM60A
VJ MC60A
VJ M263C
VJ M2110
VJ
MC37A
MC37
46 HAB
4V VE
BE02A 1
210A 2
CE01B 3
7309A 4
ND
ND
ND
ND
2120
2635
6V NR
2 2100A
4 M263A
ND
VJ
3V NR
214A 1
M2110 3
ND
VJ
2110
60V NR
9001P 21
9000P 33
210A 43
ND
ND
ND
16V GR
0087A 1
BE02A 2
CE01B 7
MBSIB 9
ND
ND
ND
VJ
2V NR
0085A 1
0086A 2
NR
ND
BSI1
60V MR
21 MEBSI
42 2100A
49 214A
53 2101A
VJ
ND
ND
ND
6V NR
M263C 3
2101A 5
VJ
ND
2630
60V BE
19 1050
32 8292
ND
ND
50 P/B
3V NR
8292 1
1050 2
ND
ND
CA00
1V ND
B03 1
NR
BB00
1V ND
1 BB0B0
NR
02 CBN
MC131
MC13
BB0B0
MC131
MM01
NR
NR
NR

Brake Lamps

item code	description	information
1320	null	engine ECU /
2110	null	additional brake lamp
2120	null	dual function brake switch /
2630	null	rear left lamp on body
2635	null	rear right lamp on body
7800	null	calculateur controle de stabilite
BB00	null	ancillaries battery
BFRM	null	engine fuse and relay box
BSI1	null	built-in systems interface
CA00	null	ignition switch
E703A	null	crimp one information (or equipotential 703) wire
E900A	null	crimp one information (or equipotential 276A) wire
E900B	null	crimp one information (or equipotential 900B) wire
E901A	null	crimp one information (or equipotential 901A) wire
E901B	null	crimp one information (or equipotential 901B) wire
EM37A	null	crimp earth (earth point number 37A)
EM37C	null	crimp earth (earth point number 37C)
EM60A	null	crimp earth (earth point number 60A)
MC13	null	body earth point number 13
MC37A	null	body earth point number 37A
MC37C	null	body earth point number 37
MC60A	null	body earth point number 60
MC70A	null	body earth point number 70A
MM01	null	engine earth point number 01

Daytime Running Lamps

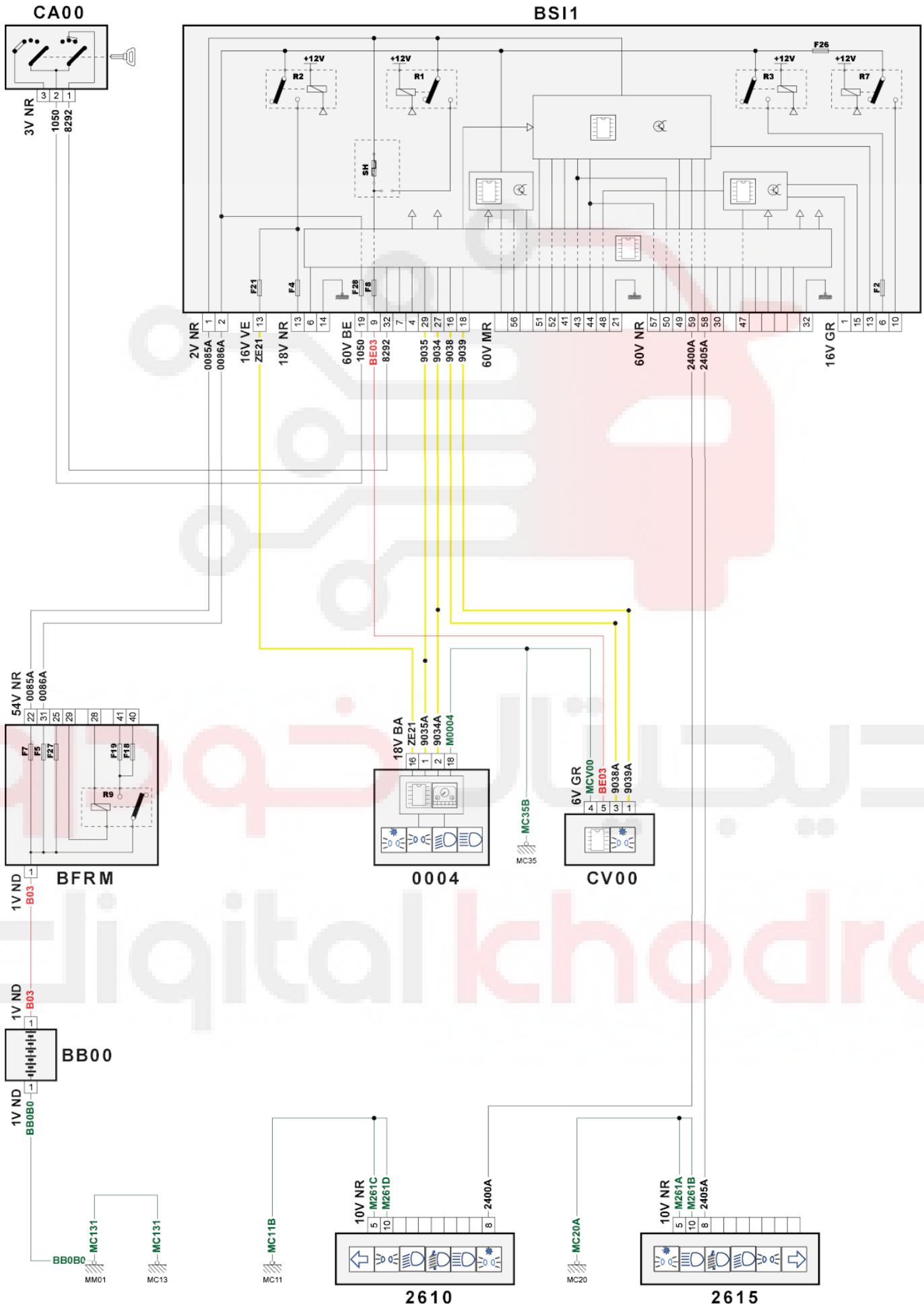

Day Time Running Lamps

item code	description	information
0004	null	/ instrument panel
2610	null	left-hand headlamp
2615	null	right-hand headlamp
BB00	null	ancillaries battery
BFRM	null	engine fuse and relay box
BSI1	null	built-in systems interface
CA00	null	ignition switch
CV00	null	control under the steering wheel
E934	null	crimp one information (or equipotential 934) wire
E935	null	crimp one information (or equipotential 935) wire
E938	null	crimp one information (or equipotential 938) wire
E939	null	crimp one information (or equipotential 939) wire
EM11A	null	crimp earth (earth point number 11A)
EM20A	null	crimp earth (earth point number 20A)
EM35B	null	crimp earth (earth point number 35B)
MC11B	null	body earth point number 11B
MC13	null	body earth point number 13
MC20A	null	body earth point number 20A
MC35	null	body earth point number 35
MM01	null	engine earth point number 01

Day Time Running Lamps

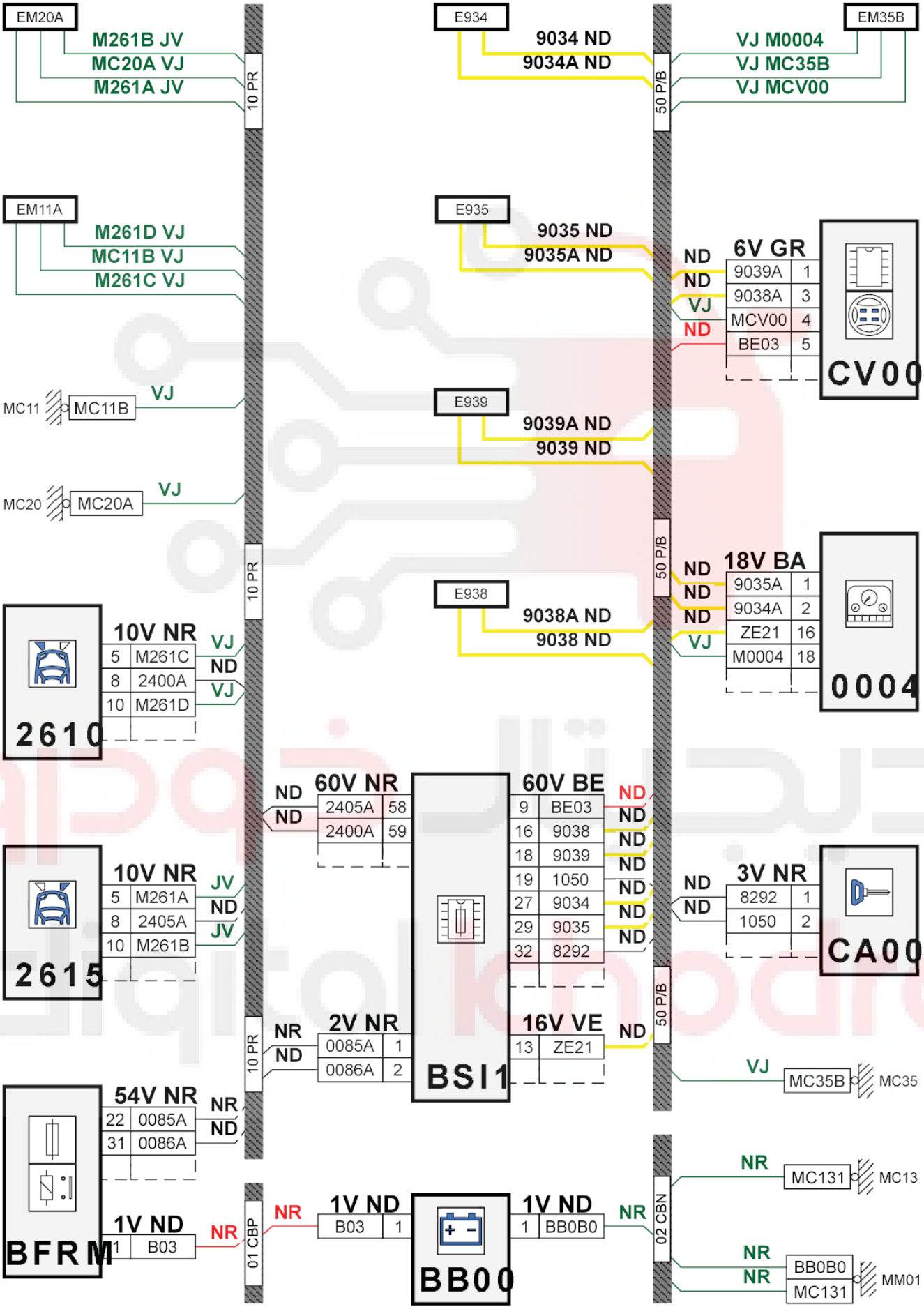

D3CZHHXG

Day Time Running Lamps

item code	description	information
0004	null	/ instrument panel
2610	null	left-hand headlamp
2615	null	right-hand headlamp
BB00	null	ancillaries battery
BFRM	null	engine fuse and relay box
BSI1	null	built-in systems interface
CA00	null	ignition switch
CV00	null	control under the steering wheel
E934	null	crimp one information (or equipotential 934) wire
E935	null	crimp one information (or equipotential 935) wire
E938	null	crimp one information (or equipotential 938) wire
E939	null	crimp one information (or equipotential 939) wire
EM11A	null	crimp earth (earth point number 11A)
EM20A	null	crimp earth (earth point number 20A)
EM35B	null	crimp earth (earth point number 35B)
MC11B	null	body earth point number 11B
MC13	null	body earth point number 13
MC20A	null	body earth point number 20A
MC35	null	body earth point number 35
MM01	null	engine earth point number 01

Direction Indicator,Side Repeaters, Hazard Warning Lamps

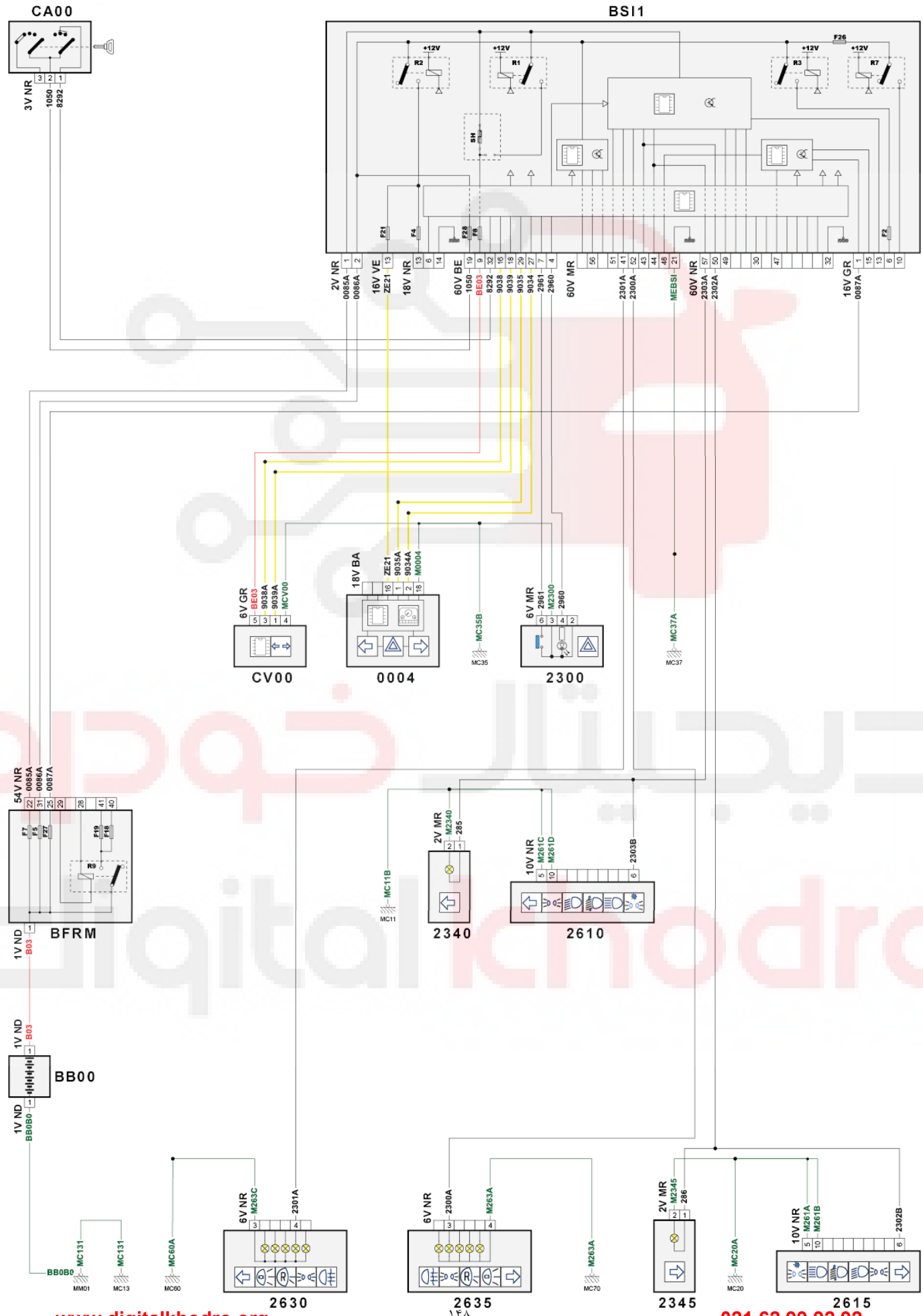

Direction Indicator,Side Repeaters, Hazard Warning Lamps

item code	description	information
0004	null	/ instrument panel
2300	null	hazard warning switch
2340	null	left-hand side repeater flasher
2345	null	right-hand side repeater flasher
2610	null	left-hand headlamp
2615	null	right-hand headlamp
2630	null	rear left lamp on body
2635	null	rear right lamp on body
BB00	null	ancillaries battery
BFRM	null	engine fuse and relay box
BSI1	null	built-in systems interface
CA00	null	ignition switch
CV00	null	control under the steering wheel
E230A	null	crimp one information (or equipotential 230) wire
E230B	null	crimp one information (or equipotential 230) wire
E934	null	crimp one information (or equipotential 934) wire
E935	null	crimp one information (or equipotential 935) wire
E938	null	crimp one information (or equipotential 938) wire
E939	null	crimp one information (or equipotential 939) wire
EM11A	null	crimp earth (earth point number 11A)
EM20A	null	crimp earth (earth point number 20A)
EM35B	null	crimp earth (earth point number 35B)
EM37A	null	crimp earth (earth point number 37A)
EM60A	null	crimp earth (earth point number 60A)
MC11B	null	body earth point number 11B
MC13	null	body earth point number 13
MC20A	null	body earth point number 20A
MC35	null	body earth point number 35
MC37A	null	body earth point number 37A
MC60A	null	body earth point number 60
MC70A	null	body earth point number 70A
MM01	null	engine earth point number 01

Direction Indicator,Side Repeaters, Hazard Warning Lamps

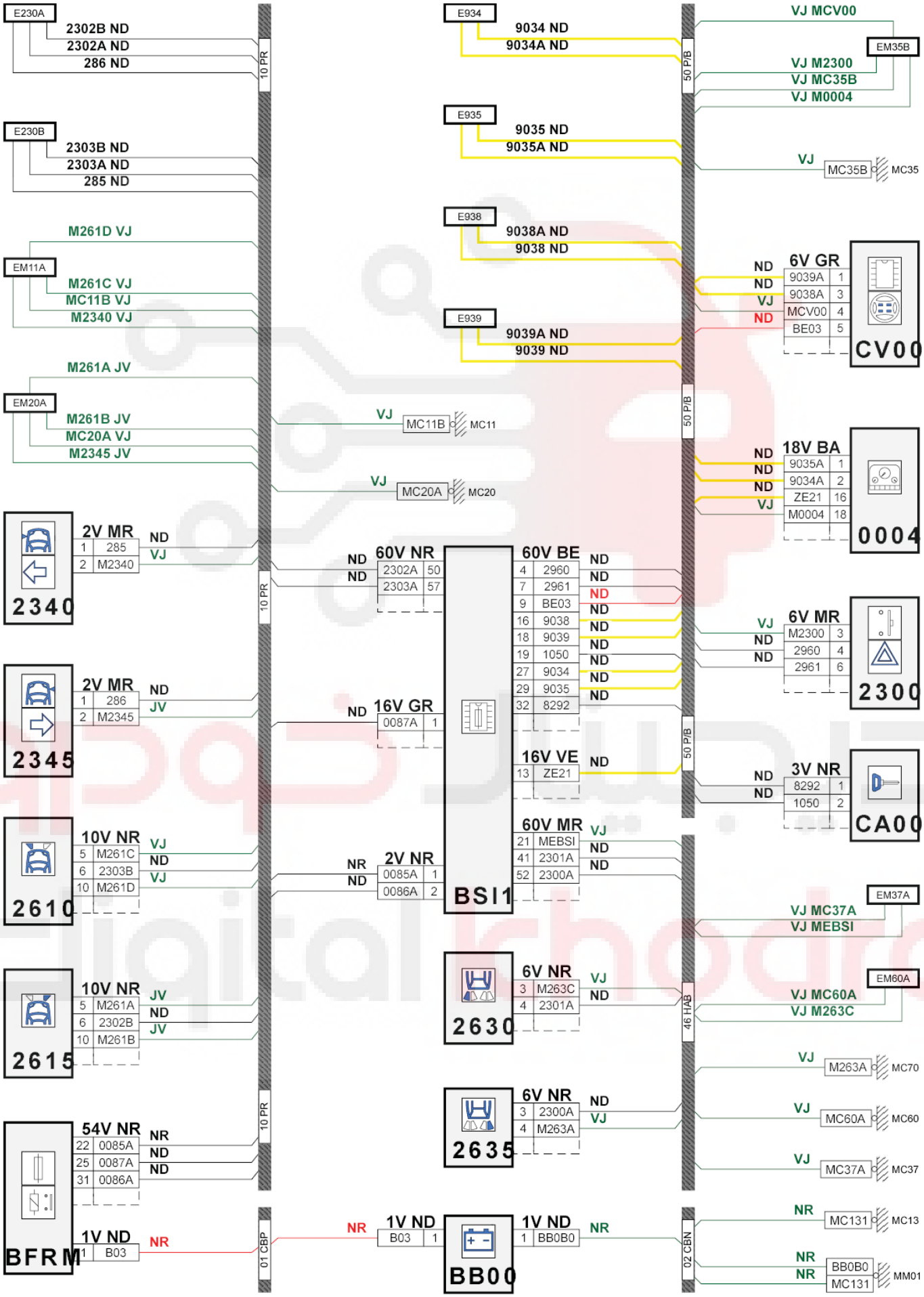

Direction Indicator,Side Repeaters, Hazard Warning Lamps

item code	description	information
0004	null	/ instrument panel
2300	null	hazard warning switch
2340	null	left-hand side repeater flasher
2345	null	right-hand side repeater flasher
2610	null	left-hand headlamp
2615	null	right-hand headlamp
2630	null	rear left lamp on body
2635	null	rear right lamp on body
BB00	null	ancillaries battery
BFRM	null	engine fuse and relay box
BSI1	null	built-in systems interface
CA00	null	ignition switch
CV00	null	control under the steering wheel
E230A	null	crimp one information (or equipotential 230) wire
E230B	null	crimp one information (or equipotential 230) wire
E934	null	crimp one information (or equipotential 934) wire
E935	null	crimp one information (or equipotential 935) wire
E938	null	crimp one information (or equipotential 938) wire
E939	null	crimp one information (or equipotential 939) wire
EM11A	null	crimp earth (earth point number 11A)
EM20A	null	crimp earth (earth point number 20A)
EM35B	null	crimp earth (earth point number 35B)
EM37A	null	crimp earth (earth point number 37A)
EM60A	null	crimp earth (earth point number 60A)
MC11B	null	body earth point number 11B
MC13	null	body earth point number 13
MC20A	null	body earth point number 20A
MC35	null	body earth point number 35
MC37A	null	body earth point number 37A
MC60A	null	body earth point number 60
MC70A	null	body earth point number 70A
MM01	null	engine earth point number 01

Horn

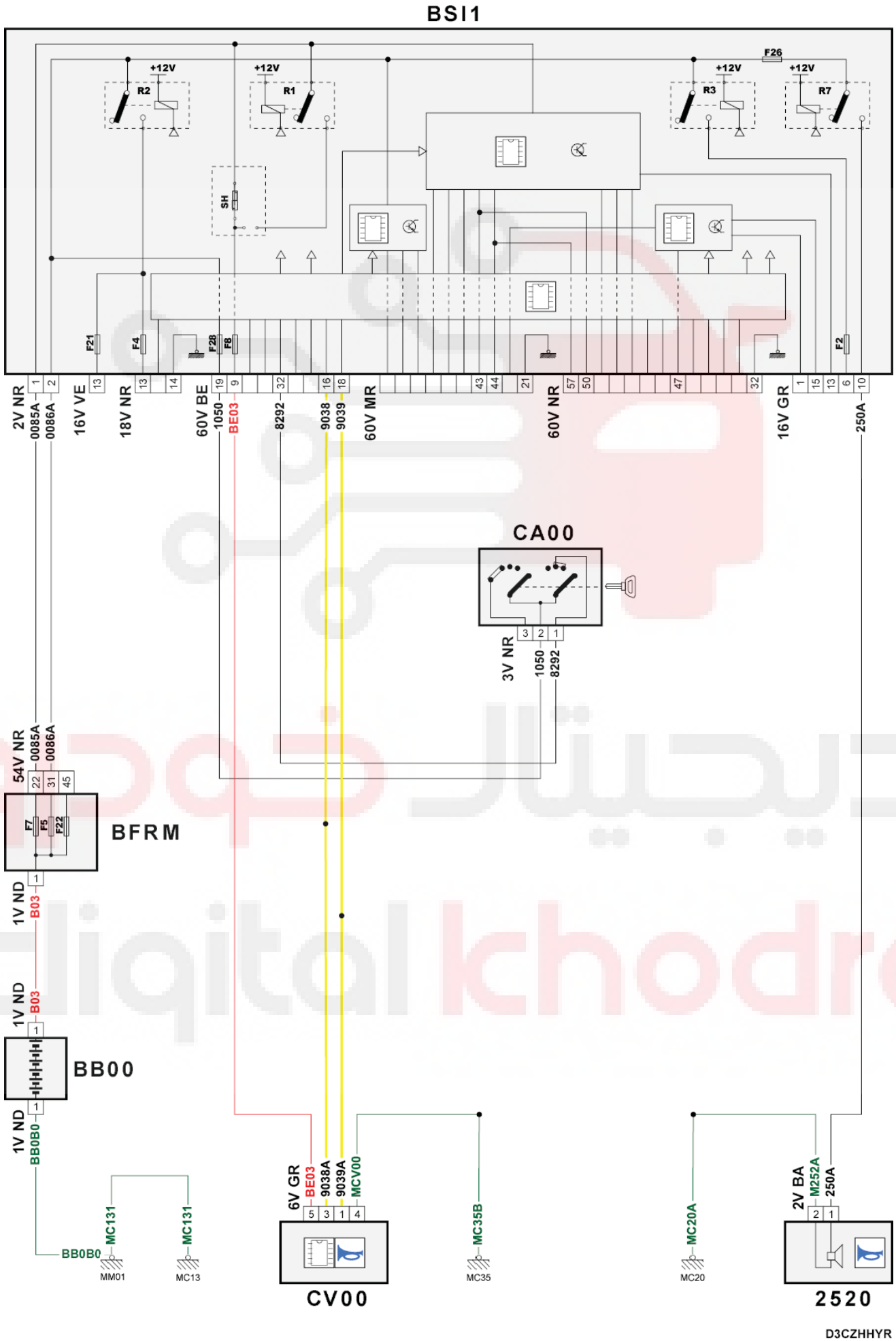
BSI1
+12V
R2
R1
R3
R7
F26
SH
F21
F4
F28
F8
F2
2V NR
0085A
0086A
16V VE
18V NR
60V BE
1050
BE03
8292
9038
9039
60V MR
60V NR
16V GR
250A
CA00
3V NR
1050
8292
54V NR
0085A
0086A
F7
F5
F22
BFRM
1V ND
B03
1V ND
B03
BB00
1V ND
BB0B0
BB0B0
MC131
MC131
MM01
MC13
6V GR
BE03
9038A
9039A
MCV00
CV00
MC35B
MC35
MC20A
MC20
2V BA
M252A
250A
2520
D3CZHHYR

Horn

item code	description	information
2520	null	horn
BB00	null	ancillaries battery
BFRM	null	engine fuse and relay box
BSI1	null	built-in systems interface
CA00	null	ignition switch
CV00	null	control under the steering wheel
E938	null	crimp one information (or equipotential 938) wire
E939	null	crimp one information (or equipotential 939) wire
EM20A	null	crimp earth (earth point number 20A)
EM35B	null	crimp earth (earth point number 35B)
MC13	null	body earth point number 13
MC20A	null	body earth point number 20A
MC35	null	body earth point number 35
MM01	null	engine earth point number 01

Horn

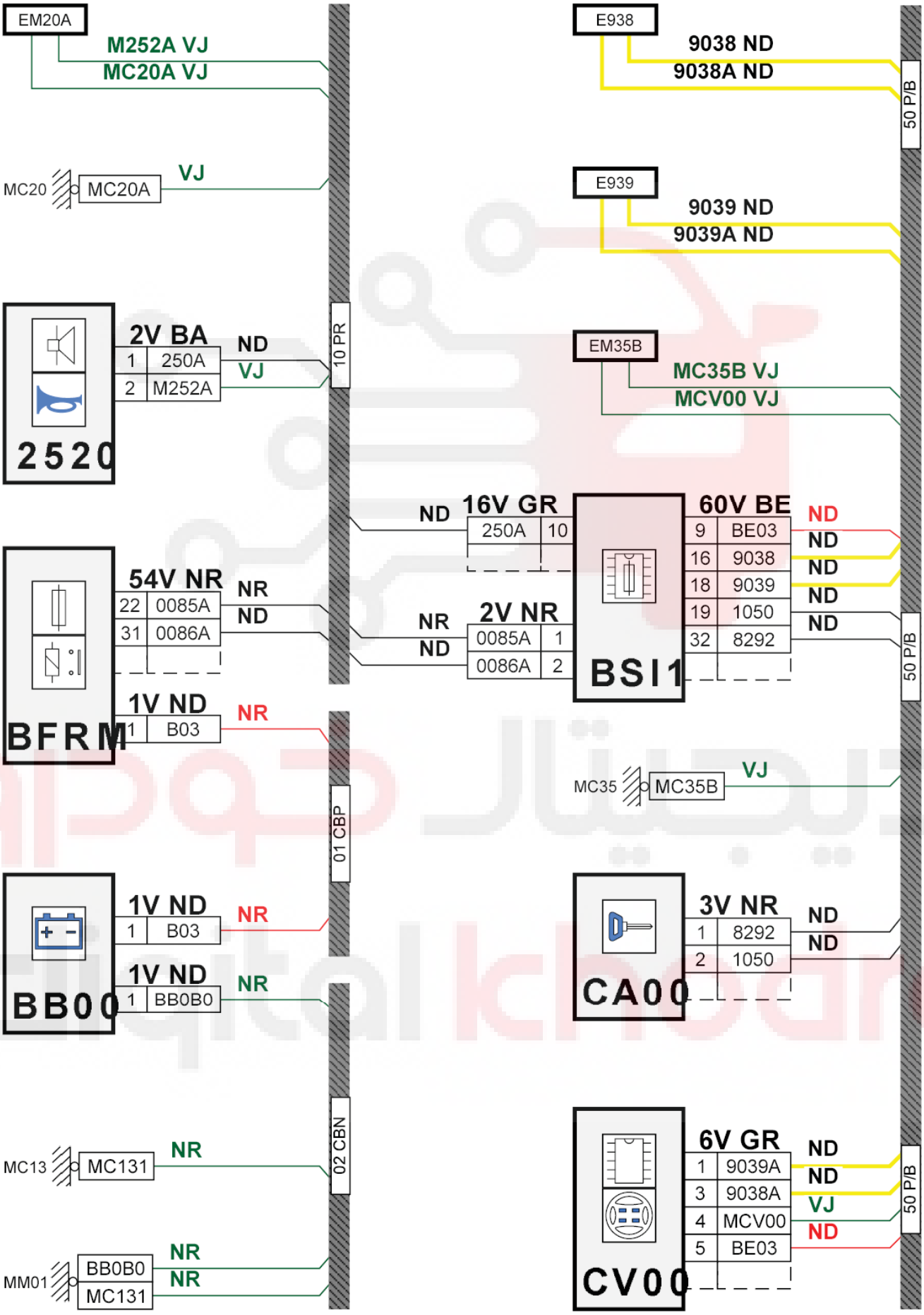

D3CZHHYG

Reversing Lamps

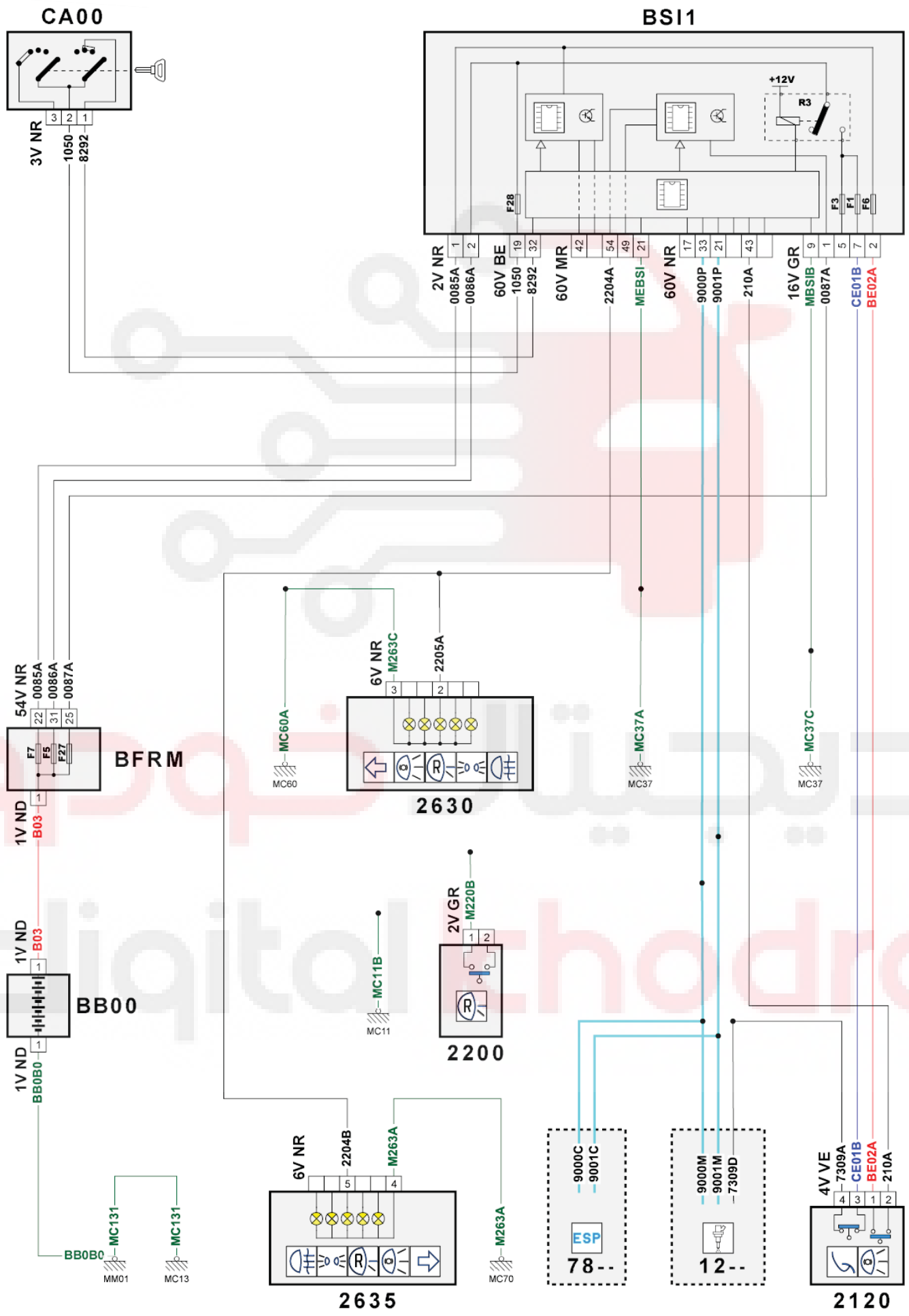

Reversing Lamps

item code	description	information
1320	null	engine ECU /
2120	null	dual function brake switch /
2200	null	reverse lamp switch
2630	null	rear left lamp on body
2635	null	rear right lamp on body
7800	null	calculateur controle de stabilite
BB00	null	ancillaries battery
BFRM	null	engine fuse and relay box
BSI1	null	built-in systems interface
CA00	null	ignition switch
E220	null	crimp one information (or equipotential 220) wire
E703A	null	crimp one information (or equipotential 703) wire
E869	null	crimp one information (or equipotential 869) wire
E900A	null	crimp one information (or equipotential 276A) wire
E900B	null	crimp one information (or equipotential 900B) wire
E901A	null	crimp one information (or equipotential 901A) wire
E901B	null	crimp one information (or equipotential 901B) wire
EM11A	null	crimp earth (earth point number 11A)
EM37A	null	crimp earth (earth point number 37A)
EM37C	null	crimp earth (earth point number 37C)
EM60A	null	crimp earth (earth point number 60A)
MC11B	null	body earth point number 11B
MC13	null	body earth point number 13
MC37A	null	body earth point number 37A
MC37C	null	body earth point number 37
MC60A	null	body earth point number 60
MC70A	null	body earth point number 70A
MM01	null	engine earth point number 01

Reversing Lamps

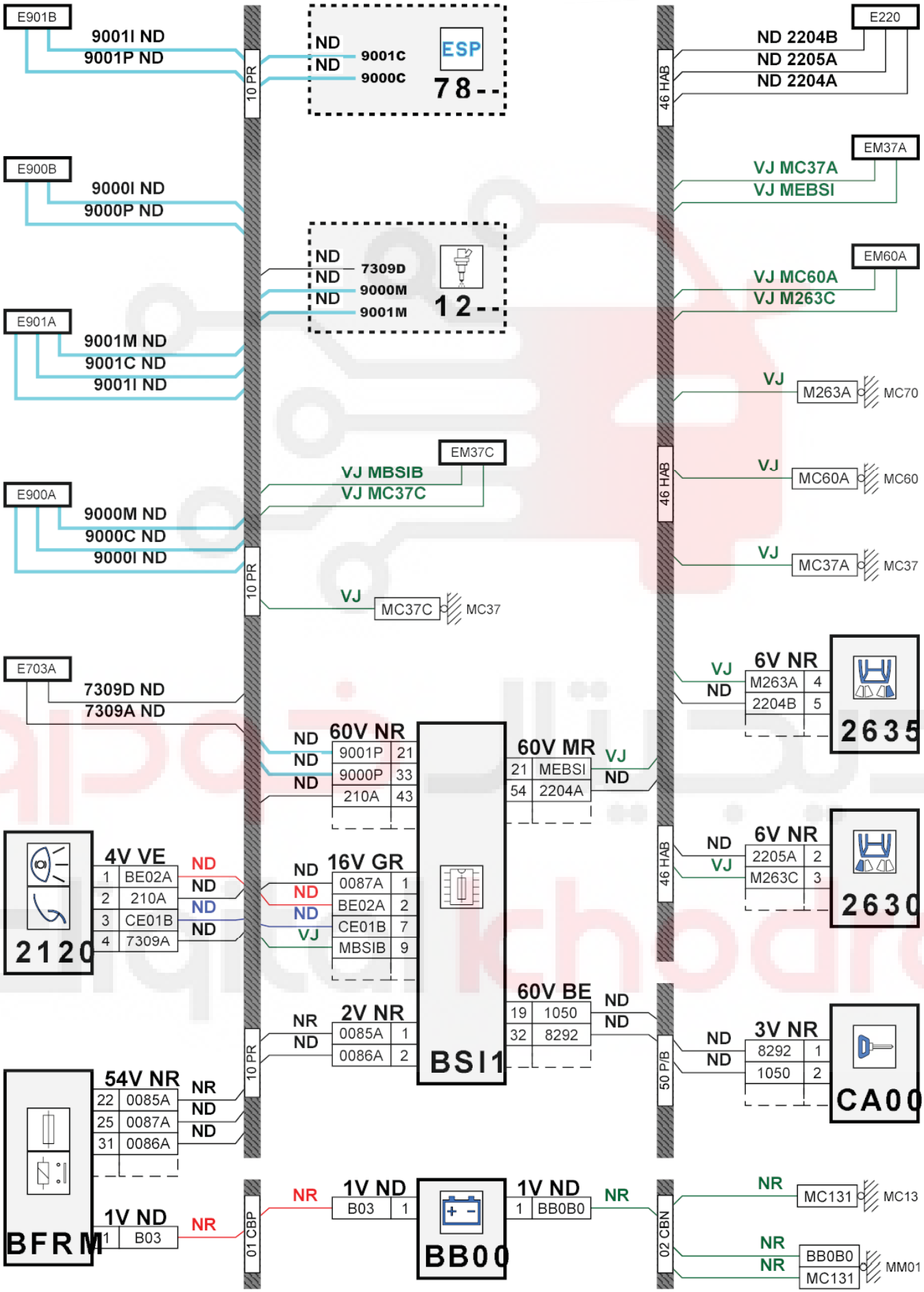

Reversing Lamps

item code	description	information
1320	null	engine ECU /
2120	null	dual function brake switch /
2630	null	rear left lamp on body
2635	null	rear right lamp on body
7800	null	calculateur controle de stabilite
BB00	null	ancillaries battery
BFRM	null	engine fuse and relay box
BSI1	null	built-in systems interface
CA00	null	ignition switch
E220	null	crimp one information (or equipotential 220) wire
E703A	null	crimp one information (or equipotential 703) wire
E900A	null	crimp one information (or equipotential 276A) wire
E900B	null	crimp one information (or equipotential 900B) wire
E901A	null	crimp one information (or equipotential 901A) wire
E901B	null	crimp one information (or equipotential 901B) wire
EM37A	null	crimp earth (earth point number 37A)
EM37C	null	crimp earth (earth point number 37C)
EM60A	null	crimp earth (earth point number 60A)
MC13	null	body earth point number 13
MC37A	null	body earth point number 37A
MC37C	null	body earth point number 37
MC60A	null	body earth point number 60
MC70A	null	body earth point number 70A
MM01	null	engine earth point number 01

Dipped & Main Head Lamps

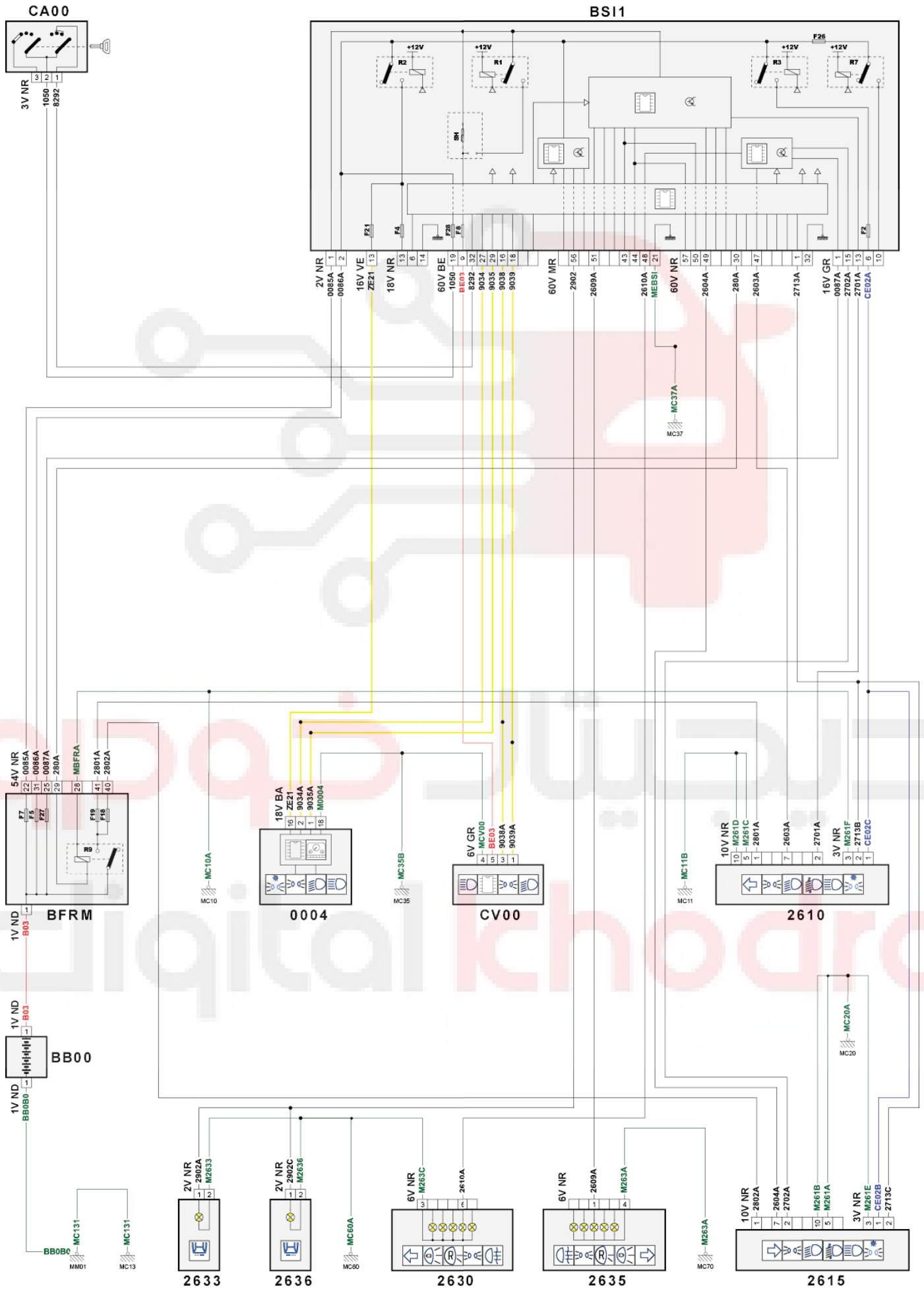

Dipped & Main Head Lamps

item code	description	information
0004	null	/ instrument panel
2610	null	left-hand headlamp
2615	null	right-hand headlamp
2630	null	rear left lamp on body
2633	null	right-hand number plate lamp
2635	null	rear right lamp on body
2636	null	left-hand number plate lamp
BB00	null	ancillaries battery
BFRM	null	engine fuse and relay box
BSI1	null	built-in systems interface
CA00	null	ignition switch
CV00	null	control under the steering wheel
E271A	null	crimp one information (or equipotential 271) wire
E292	null	crimp one information (or equipotential 292) wire
E934	null	crimp one information (or equipotential 934) wire
E935	null	crimp one information (or equipotential 935) wire
E938	null	crimp one information (or equipotential 938) wire
E939	null	crimp one information (or equipotential 939) wire
EC02A	null	splice of an "ignition +" protected by fuse no. 02
EM10B	null	crimp earth (earth point number 10B)
EM11A	null	crimp earth (earth point number 11A)
EM20A	null	crimp earth (earth point number 20A)
EM35B	null	crimp earth (earth point number 35B)
EM37A	null	crimp earth (earth point number 37A)
EM60A	null	crimp earth (earth point number 60A)
MC10A	null	body earth point number 10A
MC11B	null	body earth point number 11B
MC13	null	body earth point number 13
MC20A	null	body earth point number 20A
MC35	null	body earth point number 35
MC37A	null	body earth point number 37A
MC60A	null	body earth point number 60
MC70A	null	body earth point number 70A
MM01	null	engine earth point number 01
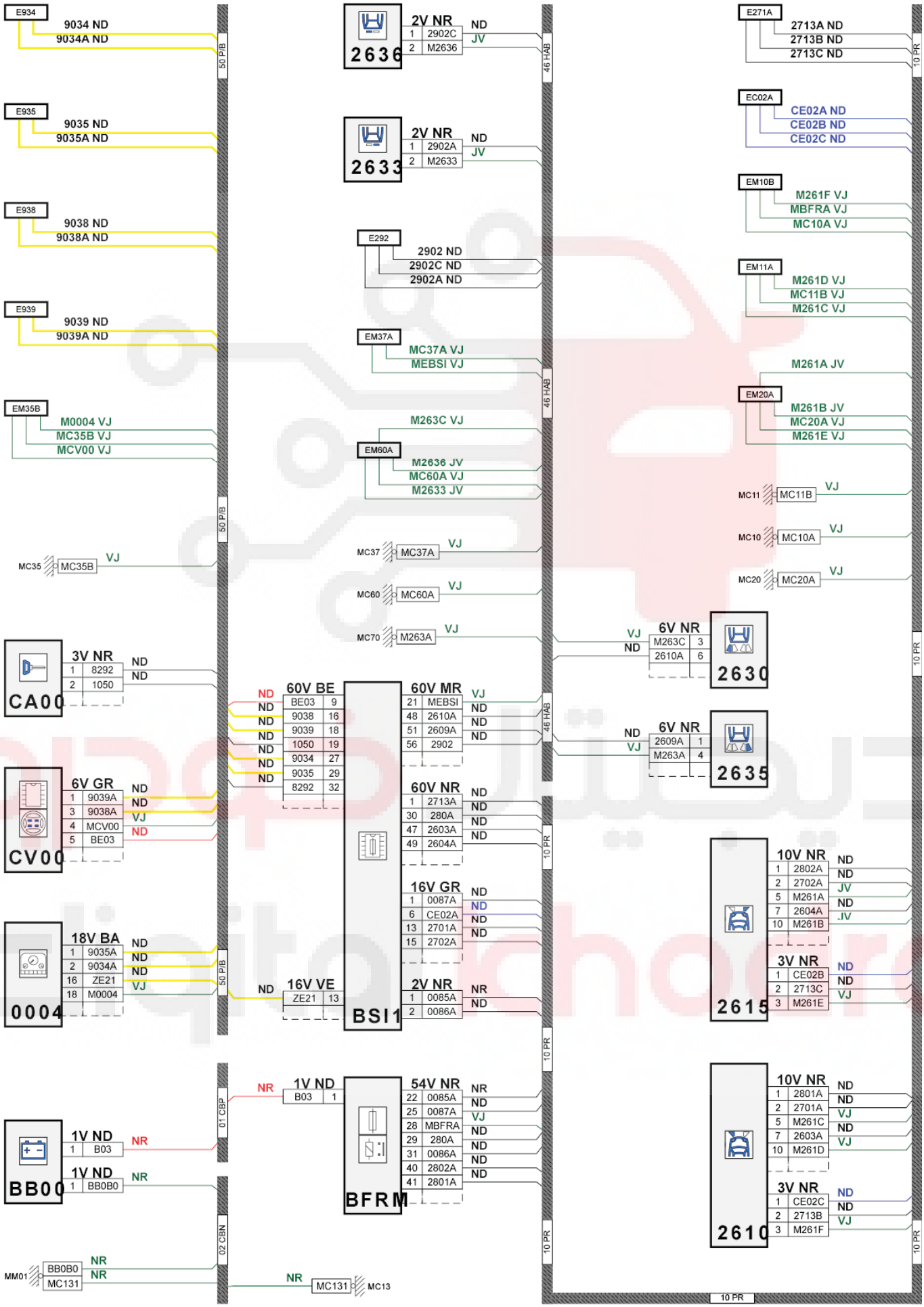
Dipped & Main Head Lamps