SECTION EC
ENGINE CONTROL SYSTEM

CONTENTS

MODIFICATION NOTICE 5
Major Modification Item 5
ENGINE CONTROL SYSTEM 6
System Diagram 6
ON BOARD DIAGNOSTIC (OBD) SYSTEM 7
Introduction 7
Two Trip Detection Logic 7
Emission-related Diagnostic Information 7
TROUBLE DIAGNOSIS 12
Trouble Diagnosis Introduction 12
DTC Inspection Priority Chart 18
Fail-Safe Chart 19
Basic Inspection 20
Symptom Matrix Chart 25
Engine Control Component Parts Location 29
Vacuum Hose Drawing 35
Circuit Diagram 36
ECM Harness Connector Terminal Layout 38
ECM Terminals and Reference Value 38
CONSULT-II Reference Value in Data Monitor ... 48
Major Sensor Reference Graph in Data Monitor Mode 51
TROUBLE DIAGNOSIS - SPECIFICATION VALUE 53
Description 53
Testing Condition 53
Inspection Procedure 53
Diagnostic Procedure 54
TROUBLE DIAGNOSIS FOR INTERMITTENT INCIDENT 63
Description 63
Diagnostic Procedure 63
POWER SUPPLY AND GROUND CIRCUIT 64
Wiring Diagram 64
Diagnostic Procedure 67
Ground Inspection 72
DTC U1000, U1001 CAN COMMUNICATION LINE 73
Description 73
On Board Diagnosis Logic 73
DTC Confirmation Procedure 73
Wiring Diagram 74
DTC P0011, P0021 IVT CONTROL 75
Description 75
CONSULT-II Reference Value in Data Monitor Mode . 75
On Board Diagnosis Logic 76
DTC Confirmation Procedure 76
Overall Function Check 77
DTC P0102, P0103 MAF SENSOR 78
Component Description 78
CONSULT-II Reference Value in Data Monitor Mode . 78
On Board Diagnosis Logic 79
DTC Confirmation Procedure 80
Wiring Diagram 81
DTC P0117, P0118 ECT SENSOR 82
Component Description 82
On Board Diagnosis Logic 82
DTC Confirmation Procedure 82
Wiring Diagram 83
DTC P0122, P0123 TP SENSOR 84
Component Description 84
CONSULT-II Reference Value in Data Monitor Mode . 84
On Board Diagnosis Logic 84
DTC Confirmation Procedure 85
Wiring Diagram 86
DTC P0138, P0158 HO2S2 87
Component Description 87
CONSULT-II Reference Value in Data Monitor Mode . 87
On Board Diagnosis Logic 87
DTC Confirmation Procedure 88
Wiring Diagram 89
DTC P0222, P0223 TP SENSOR 91
Component Description 91
CONSULT-II Reference Value in Data Monitor Mode . 91
On Board Diagnosis Logic 91
DTC Confirmation Procedure 92
Wiring Diagram 93

DTC P0327, P0328 KS 94
Component Description 94
On Board Diagnosis Logic 94
DTC Confirmation Procedure 94
Wiring Diagram 95
DTC P0335 CKP SENSOR (POS) 96
Component Description 96
CONSULT-II Reference Value in Data Monitor Mode . 96
On Board Diagnosis Logic 96
DTC Confirmation Procedure 97
Wiring Diagram 98
DTC P0340, P0345 CMP SENSOR (PHASE) 99
Component Description 99
On Board Diagnosis Logic 99
DTC Confirmation Procedure 100
Wiring Diagram 101
DTC P0550 PSP SENSOR 103
Component Description 103
CONSULT-II Reference Value in Data Monitor Mode . 103
On Board Diagnosis Logic 103
DTC Confirmation Procedure 103
Wiring Diagram 105
DTC P0605 ECM 106
Component Description 106
On Board Diagnosis Logic 106
DTC Confirmation Procedure 106
DTC P1031, P1032, P1051, P1052 A/F SENSOR 1 HEATER 108
Description 108
CONSULT-II Reference Value in Data Monitor Mode . 108
On Board Diagnosis Logic 108
DTC Confirmation Procedure 108
Wiring Diagram 110
DTC P1065 ECM POWER SUPPLY 112
Component Description 112
On Board Diagnosis Logic 112
DTC Confirmation Procedure 112
Wiring Diagram 113
DTC P1111, P1136 IVT CONTROL SOLENOID VALVE 114
Component Description 114
CONSULT-II Reference Value in Data Monitor Mode . 114
On Board Diagnosis Logic 114
DTC Confirmation Procedure 114
Wiring Diagram 116
DTC P1121 ELECTRIC THROTTLE CONTROL ACTUATOR 118
Component Description 118
On Board Diagnosis Logic 118
DTC Confirmation Procedure 118
DTC P1122 ELECTRIC THROTTLE CONTROL FUNCTION 120
Description 120
On Board Diagnosis Logic 120
DTC Confirmation Procedure 120
Wiring Diagram 121
DTC P1124, P1126 THROTTLE CONTROL MOTOR RELAY 122
Component Description 122
CONSULT-II Reference Value in Data Monitor Mode . 122
On Board Diagnosis Logic 122
DTC Confirmation Procedure 122
Wiring Diagram 124
DTC P1128 THROTTLE CONTROL MOTOR 125
Component Description 125
On Board Diagnosis Logic 125
DTC Confirmation Procedure 125
Wiring Diagram 126
DTC P1211 TCS CONTROL UNIT 127
Description 127
On Board Diagnosis Logic 127
DTC Confirmation Procedure 127
DTC P1212 TCS COMMUNICATION LINE 128
Description 128
On Board Diagnosis Logic 128
DTC Confirmation Procedure 128
DTC P1217 ENGINE OVER TEMPERATURE 129
Description 129
CONSULT-II Reference Value in Data Monitor Mode . 130
On Board Diagnosis Logic 131
Overall Function Check 131
Wiring Diagram 133
Main 12 Causes of Overheating 135
DTC P1225 TP SENSOR 136
Component Description 136
On Board Diagnosis Logic 136
DTC Confirmation Procedure 136
DTC P1226 TP SENSOR 137
Component Description 137
On Board Diagnosis Logic 137
DTC Confirmation Procedure 137
DTC P1229 SENSOR POWER SUPPLY 138
On Board Diagnosis Logic 138
DTC Confirmation Procedure 138
Wiring Diagram 139
DTC P1271, P1281 A/F SENSOR 1 140
Component Description 140
CONSULT-II Reference Value in Data Monitor Mode . 140
On Board Diagnosis Logic 140
DTC Confirmation Procedure 140
Overall Function Check 141
Wiring Diagram 142

DTC P1272, P1282 A/F SENSOR 1 144
Component Description 144
CONSULT-II Reference Value in Data Monitor Mode .144
On Board Diagnosis Logic 144
DTC Confirmation Procedure 144
Overall Function Check 145
Wiring Diagram 146
DTC P1276, P1286 A/F SENSOR 1 148
Component Description 148
CONSULT-II Reference Value in Data Monitor Mode .148
On Board Diagnosis Logic 148
Overall Function Check 149
Wiring Diagram 150
DTC P1564 ASCD STEERING SWITCH 152
Component Description 152
CONSULT-II Reference Value in Data Monitor Mode .152
On Board Diagnosis Logic 152
DTC Confirmation Procedure 153
Wiring Diagram 154
DTC P1572 ASCD BRAKE SWITCH 155
Component Description 155
CONSULT-II Reference Value in Data Monitor Mode .155
On Board Diagnosis Logic 155
DTC Confirmation Procedure 156
Overall Function Check 156
Wiring Diagram 158
DTC P1574 ASCD VEHICLE SPEED SENSOR 159
Component Description 159
On Board Diagnosis Logic 159
DTC Confirmation Procedure 159
DTC P1700 CVT CONTROL SYSTEM 161
Description 161
DTC P1706 PNP SWITCH 162
Component Description 162
CONSULT-II Reference Value in Data Monitor Mode .162
On Board Diagnosis Logic 162
DTC Confirmation Procedure 162
Overall Function Check 163
Wiring Diagram 164
DTC P1715 INPUT SPEED SENSOR (PRIMARY SPEED SENSOR) 165
Description 165
CONSULT-II Reference Value in Data Monitor Mode .165
On Board Diagnosis Logic 165
DTC Confirmation Procedure 165
DTC P1720 VSS 167
Description 167
CONSULT-II Reference Value in Data Monitor Mode .167
On Board Diagnosis Logic 167
DTC Confirmation Procedure 167
DTC P1805 BRAKE SWITCH 169
Description 169
CONSULT-II Reference Value in Data Monitor Mode .169
On Board Diagnosis Logic 169
DTC Confirmation Procedure 169
Wiring Diagram 171
DTC P2122, P2123 APP SENSOR 172
Component Description 172
CONSULT-II Reference Value in Data Monitor Mode .172
On Board Diagnosis Logic 172
DTC Confirmation Procedure 173
Wiring Diagram 174
DTC P2127, P2128 APP SENSOR 175
Component Description 175
CONSULT-II Reference Value in Data Monitor Mode .175
On Board Diagnosis Logic 175
DTC Confirmation Procedure 176
Wiring Diagram 177
DTC P2135 TP SENSOR 178
Component Description 178
CONSULT-II Reference Value in Data Monitor Mode .178
On Board Diagnosis Logic 178
DTC Confirmation Procedure 179
Wiring Diagram 180
DTC P2138 APP SENSOR 181
Component Description 181
CONSULT-II Reference Value in Data Monitor Mode .181
On Board Diagnosis Logic 181
DTC Confirmation Procedure 182
Wiring Diagram 183
HO2S2 HEATER 184
Wiring Diagram —LHD Models— 184
IAT SENSOR 186
Wiring Diagram 186
HO2S2 187
Wiring Diagram —LHD Models— 187
IGNITION SIGNAL 189
Wiring Diagram 189
EVAP CANISTER PURGE VOLUME CONTROL SOLENOID VALVE 192
Wiring Diagram 192
VIAS 193
Wiring Diagram 193
INJECTOR CIRCUIT 194
Wiring Diagram 194
FUEL PUMP CIRCUIT 195
Wiring Diagram 195
ELECTRONIC CONTROLLED ENGINE MOUNT .196
Wiring Diagram 196
REFRIGERANT PRESSURE SENSOR 197
Wiring Diagram 197
ASCD BRAKE SWITCH 198
Wiring Diagram 198
ASCD INDICATOR 199
Wiring Diagram 199

MIL AND DATA LINK CONNECTOR 200
Wiring Diagram 200
SERVICE DATA AND SPECIFICATIONS (SDS) ... 203
Fuel Pressure 203
Idle Speed and Ignition Timing 203
Mass Air Flow Sensor 203
Intake Air Temperature Sensor 203
Engine Coolant Temperature Sensor 203
Air Fuel Ratio (A/F) Sensor 1 Heater 203
Heated Oxygen Sensor 2 Heater 203
Throttle Control Motor 203
Injector 203
Fuel Pump 203

MODIFICATION NOTICE

PFP:00000

Major Modification Item

ABS00H4J

- Air fuel ratio (A/F) sensor 1 is applied.

ENGINE CONTROL SYSTEM

PFP:23710

System Diagram

ABS00GSB

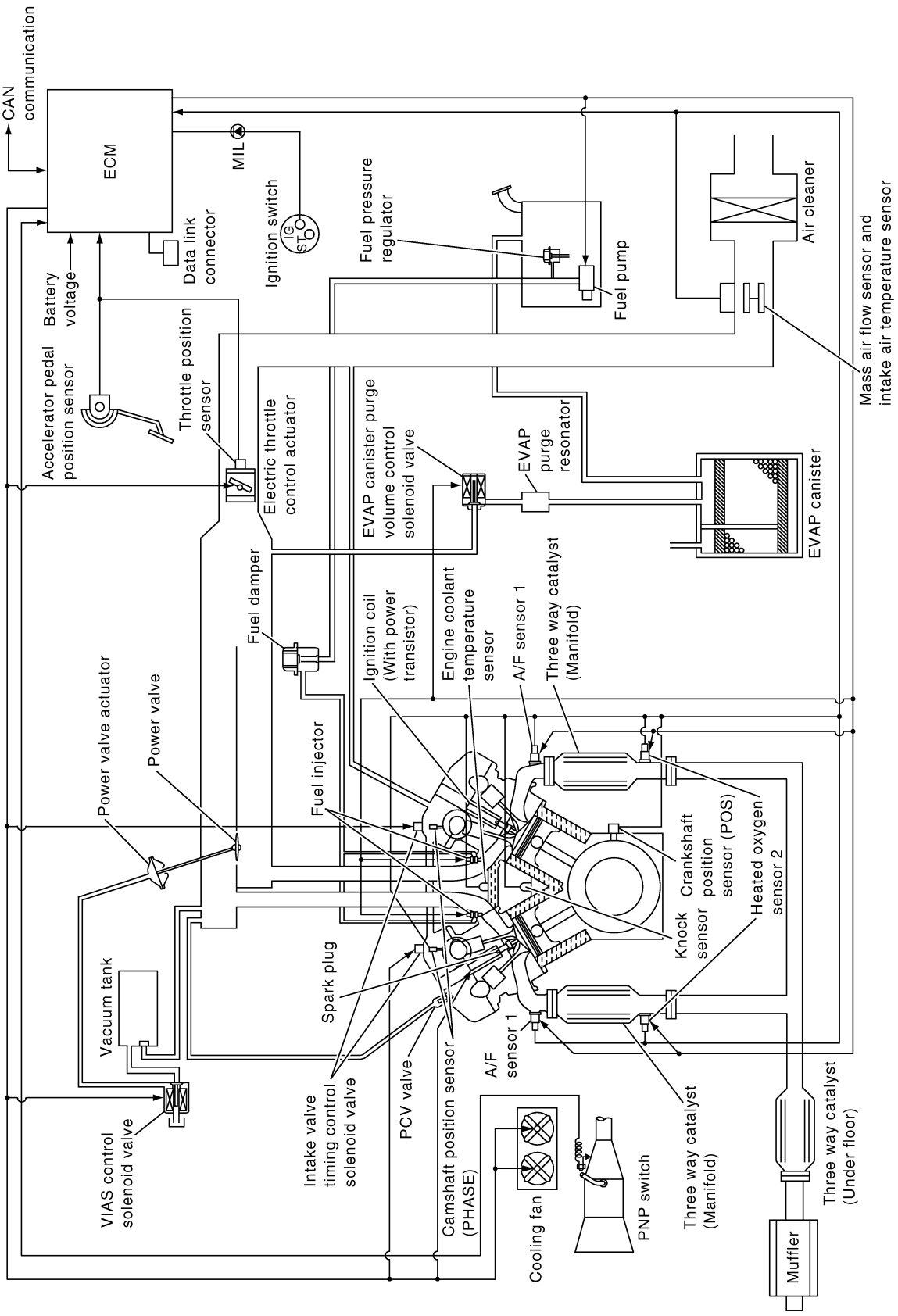

PBIB2841E

ON BOARD DIAGNOSTIC (OBD) SYSTEM

PFP:00028

Introduction

ABS00GSP

The ECM has an on board diagnostic system, which detects malfunctions related to engine sensors or actuators. The ECM also records various emission-related diagnostic information including:

Emission-related diagnostic information
Diagnostic Trouble Code (DTC)
Freeze Frame data
1st Trip Diagnostic Trouble Code (1st Trip DTC)
1st Trip Freeze Frame data

The above information can be checked using procedures listed in the table below.

×: Applicable —: Not applicable

	DTC	1st trip DTC	Freeze Frame data	1st trip Freeze Frame data
CONSULT-II	×	×	×	×
ECM	×	×*	—	—

*: When DTC and 1st trip DTC simultaneously appear on the display, they cannot be clearly distinguished from each other.

The malfunction indicator lamp (MIL) on the instrument panel lights up when the same malfunction is detected in two consecutive trips (Two trip detection logic), or when the ECM enters fail-safe mode. (Refer to EC-292, "Fail-Safe Chart" .)

Two Trip Detection Logic

ABS00GSQ

When a malfunction is detected for the first time, 1st trip DTC and 1st trip Freeze Frame data are stored in the ECM memory. The MIL will not light up at this stage. <1st trip>
If the same malfunction is detected again during the next drive, the DTC and Freeze Frame data are stored in the ECM memory, and the MIL lights up. The MIL lights up at the same time when the DTC is stored. <2nd trip> The “trip” in the “Two Trip Detection Logic” means a driving mode in which self-diagnosis is performed during vehicle operation. When the ECM enters fail-safe mode (Refer to EC-292, "Fail-Safe Chart" .), the DTC is stored in the ECM memory even in the 1st trip.
When there is an open circuit on MIL circuit, the ECM cannot warn the driver by lighting up MIL when there is malfunction on engine control system.
Therefore, when electrical controlled throttle and part of ECM related diagnoses are continuously detected as NG for 5 trips, ECM warns the driver that engine control system malfunctions and MIL circuit is open by means of operating fail-safe function.
The fail-safe function also operates when above diagnoses except MIL circuit are detected and demands the driver to repair the malfunction.

Engine operating condition in fail-safe mode	Engine speed will not rise more than 2,500 rpm due to the fuel cut

Emission-related Diagnostic Information

ABS00GSR

EMISSION-RELATED DIAGNOSTIC INFORMATION ITEMS

×: Applicable –: Not applicable

Items (CONSULT-II screen terms)	DTC*1		Trip	MIL	Reference page
	CONSULT-II	ECM*2			
CAN COMM CIRCUIT	U1000	1000*3	2	—	EC-352
CAN COMM CIRCUIT	U1001	1001*3	2	—	EC-352
NO DTC IS DETECTED. FURTHER TESTING MAY BE REQUIRED.	**P0000**	**0000**	—	—	—
INT/V TIM CONT-B1	P0011	0011	2	—	EC-354
INT/V TIM CONT-B2	P0021	0021	2	—	EC-354
MAF SEN/CIRCUIT	P0102	0102	1	×	EC-357
MAF SEN/CIRCUIT	P0103	0103	1	×	EC-357
ECT SEN/CIRC	P0117	0117	2	×	EC-361

Items (CONSULT-II screen terms)	DTC*1		Trip	MIL	Reference page
	CONSULT-II	ECM*2			
ECT SEN/CIRC	P0118	0118	2	×	EC-361
TP SEN 2/CIRC	P0122	0122	1	×	EC-364
TP SEN 2/CIRC	P0123	0123	1	×	EC-364
HO2S2 (B1)	P0138	0138	2	×	EC-368
HO2S2 (B2)	P0158	0158	2	×	EC-368
TP SEN 1/CIRC	P0222	0222	1	×	EC-374
TP SEN 1/CIRC	P0223	0223	1	×	EC-374
KNOCK SEN/CIRC-B1	P0327	0327	2	—	EC-378
KNOCK SEN/CIRC-B1	P0328	0328	2	—	EC-378
CKP SEN/CIRCUIT	P0335	0335	2	×	EC-381
CMP SEN/CIRC-B1	P0340	0340	2	×	EC-385
CMP SEN/CIRC-B2	P0345	0345	2	×	EC-385
PW ST P SEN/CIRC	P0550	0550	2	—	EC-391
ECM	P0605	0605	1 or 2	× or —	EC-394
A/F SEN1 HTR (B1)	P1031	1031	2	×	EC-396
A/F SEN1 HTR (B1)	P1032	1032	2	×	EC-396
A/F SEN1 HTR (B2)	P1051	1051	2	×	EC-396
A/F SEN1 HTR (B2)	P1052	1052	2	×	EC-396
ECM BACK UP/CIRCUIT	P1065	1065	2	×	EC-402
INT/V TIM V/CIR-B1	P1111	1111	2	×	EC-405
ETC ACTR	P1121	1121	1	×	EC-411
ETC FUNCTION/CIRC	P1122	1122	1	×	EC-413
ETC MOT PWR	P1124	1124	1	×	EC-416
ETC MOT PWR	P1126	1126	1	×	EC-416
ETC MOT	P1128	1128	1	×	EC-420
INT/V TIM V/CIR-B2	P1136	1136	2	×	EC-405
TCS C/U FUNCTN	P1211	1211	2	—	EC-423
TCS/CIRC	P1212	1212	2	—	EC-424
ENG OVER TEMP	P1217	1217	1	×	EC-425
CTP LEARNING	P1225	1225	2	—	EC-434
CTP LEARNING	P1226	1226	2	—	EC-435
SENSOR POWER/CIRC	P1229	1229	1	×	EC-436
A/F SENSOR1 (B1)	P1271	1271	2	×	EC-439
A/F SENSOR1 (B1)	P1272	1272	2	×	EC-445
A/F SENSOR1 (B1)	P1276	1276	2	×	EC-451
A/F SENSOR1 (B2)	P1281	1281	2	×	EC-439
A/F SENSOR1 (B2)	P1282	1282	2	×	EC-445
A/F SENSOR1 (B2)	P1286	1286	2	×	EC-451
ASCD SW	P1564	1564	1	—	EC-457
ASCD BRAKE SW	P1572	1572	1	—	EC-461
ASCD VHL SPD SEN	P1574	1574	1	—	EC-466
NATS MALFUNCTION	P1610 - P1615	1610 - 1615	2	—	BL-116
CVT C/U FUNCT	P1700	1700	1	—	EC-468

Items (CONSULT-II screen terms)	DTC*1		Trip	MIL	Reference page
	CONSULT-II	ECM*2			
P-N POS SW/CIRCUIT	P1706	1706	2	×	EC-469
IN PULY SPEED	P1715	1715	2	—	EC-473
V/SP SEN (A/T OUT)	P1720	1720	2	—	EC-475
BRAKE SW/CIRCUIT	P1805	1805	1	×	EC-477
APP SEN 1/CIRC	P2122	2122	1	×	EC-481
APP SEN 1/CIRC	P2123	2123	1	×	EC-481
APP SEN 2/CIRC	P2127	2127	1	×	EC-485
APP SEN 2/CIRC	P2128	2128	1	×	EC-485
TP SENSOR	P2135	2135	1	×	EC-489
APP SENSOR	P2138	2138	1	×	EC-493

*1: 1st trip DTC No. is the same as DTC No.
*2: In Diagnostic Test Mode II (Self-diagnostic results)
*3: The trouble shooting for this DTC needs CONSULT-II.

DTC AND 1ST TRIP DTC

The 1st trip DTC (whose number is the same as the DTC number) is displayed for the latest self-diagnostic result obtained. If the ECM memory was cleared previously, and the 1st trip DTC did not reoccur, the 1st trip DTC will not be displayed.
If a malfunction is detected during the 1st trip, the 1st trip DTC is stored in the ECM memory. The MIL will not light up (two trip detection logic). If the same malfunction is not detected in the 2nd trip (meeting the required driving pattern), the 1st trip DTC is cleared from the ECM memory. If the same malfunction is detected in the 2nd trip, both the 1st trip DTC and DTC are stored in the ECM memory and the MIL lights up. In other words, the DTC is stored in the ECM memory and the MIL lights up when the same malfunction occurs in two consecutive trips. If a 1st trip DTC is stored and a non-diagnostic operation is performed between the 1st and 2nd trips, only the 1st trip DTC will continue to be stored. For fail-safe items, the DTC is stored in the ECM memory even in the 1st trip.
Procedures for clearing the DTC and the 1st trip DTC from the ECM memory are described in EC-283, "HOW TO ERASE EMISSION-RELATED DIAGNOSTIC INFORMATION" .
When a 1st trip DTC is detected, check, print out or write down and erase (1st trip) DTC and Freeze Frame data as specified in Work Flow procedure Step 2, refer to EC-286, "WORK FLOW" . Then perform DTC Confirmation Procedure or Overall Function Check to try to duplicate the problem. If the malfunction is duplicated, the item requires repair.

How to Read DTC and 1st Trip DTC

DTC and 1st trip DTC can be read by the following methods.

With CONSULT-II
CONSULT-II displays the DTC in “SELF-DIAG RESULTS” mode. Examples: P0117, P0340, P1065, etc.
(CONSULT-II also displays the malfunctioning component or system.)

Without CONSULT-II
The number of blinks of the MIL in the Diagnostic Test Mode II (Self-Diagnostic Results) indicates the DTC. Example: 0117, 0340, 1065, etc.

- **1st trip DTC No. is the same as DTC No.**
- **Output of a DTC indicates a malfunction. However, the Diagnostic Test Mode II does not indicate whether the malfunction is still occurring or has occurred in the past and has returned to normal. CONSULT-II can identify malfunction status as shown below. Therefore, using CONSULT-II (if available) is recommended.**

A sample of CONSULT-II display for DTC and 1st trip DTC is shown below. DTC or 1st trip DTC of a malfunction is displayed in “SELF-DIAGNOSTIC RESULTS” mode of CONSULT-II. Time data indicates how many times the vehicle was driven after the last detection of a DTC.
If the DTC is being detected currently, the time data will be [0].

If a 1st trip DTC is stored in the ECM, the time data will be [1t].

DTC display

SELF DIAG RESULTS	
DTC RESULTS	TIME
CKP SEN/CIRCUIT [P0335]	0

1st trip DTC display

SELF DIAG RESULTS	
DTC RESULTS	TIME
CKP SEN/CIRCUIT [P0335]	1t

PBIB0911E

FREEZE FRAME DATA AND 1ST TRIP FREEZE FRAME DATA

The ECM records the driving conditions such as fuel system status, engine coolant temperature, short term fuel trim, long term fuel trim, engine speed, vehicle speed, base fuel schedule and intake air temperature at the moment a malfunction is detected.
Data which are stored in the ECM memory, along with the 1st trip DTC, are called 1st trip freeze frame data. The data, stored together with the DTC data, are called freeze frame data and displayed on CONSULT-II.
Only one set of freeze frame data (either 1st trip freeze frame data or freeze frame data) can be stored in the ECM. 1st trip freeze frame data is stored in the ECM memory along with the 1st trip DTC. There is no priority for 1st trip freeze frame data and it is updated each time a different 1st trip DTC is detected. However, once freeze frame data (2nd trip detection/MIL on) is stored in the ECM memory, 1st trip freeze frame data is no longer stored. Remember, only one set of freeze frame data can be stored in the ECM.
Both 1st trip freeze frame data and freeze frame data (along with the DTCs) are cleared when the ECM memory is erased. Procedures for clearing the ECM memory are described in EC-283, "HOW TO ERASE EMISSION-RELATED DIAGNOSTIC INFORMATION" .

HOW TO ERASE EMISSION-RELATED DIAGNOSTIC INFORMATION

How to Erase DTC

WITH CONSULT-II

The emission related diagnostic information in the ECM can be erased by selecting “ERASE” in the “SELF-DIAG RESULTS” mode with CONSULT-II.

1. If the ignition switch stays ON after repair work, be sure to turn ignition switch OFF once. Wait at least 10 seconds and then turn it ON (engine stopped) again.
2. Turn CONSULT-II ON and touch “ENGINE”.
3. Touch “SELF-DIAG RESULTS”.
4. Touch “ERASE”. (The DTC in the ECM will be erased.)

How to erase DTC (With CONSULT-II)

1. If the ignition switch stays ON after repair work, be sure to turn ignition switch OFF once.
   Wait at least 10 seconds and then turn it ON again.

SELECT SYSTEM
ENGINE

2. Turn CONSULT-II “ON” and touch “ENGINE”.

SELECT DIAG MODE
WORK SUPPORT
SELF-DIAG RESULTS
DATA MONITOR
DATA MONITOR (SPEC)
CAN DIAG SUPPORT MNTR
ACTIVE TEST

3. Touch “SELF-DIAG RESULTS”.

SELF DIAG RESULTS	
DTC RESULTS	TIME
MAF SEN/CIRCUIT [P0102]	0

4. Touch “ERASE”. (The DTC in the ECM will be erased.)

PBIB2392E

WITHOUT CONSULT-II

1. If the ignition switch stays ON after repair work, be sure to turn ignition switch OFF once.
2. Wait at least 10 seconds and then turn it ON (engine stopped) again.
3. Change the diagnostic test mode from Mode II to Mode I by depressing the accelerator pedal.

- **If the battery is disconnected, the emission-related diagnostic information will be lost within 24 hours.**
- **The following data are cleared when the ECM memory is erased.**
  - Diagnostic trouble codes
  - 1st trip diagnostic trouble codes
  - Freeze frame data
  - 1st trip freeze frame data

Actual work procedures are explained using a DTC as an example. Be careful so that not only the DTC, but all of the data listed above, are cleared from the ECM memory during work procedures.

TROUBLE DIAGNOSIS

PFP:00004

Trouble Diagnosis Introduction

ABS00GSZ

INTRODUCTION

The engine has an ECM to control major systems such as fuel control, ignition control, idle air control system, etc. The ECM accepts input signals from sensors and instantly drives actuators. It is essential that both input and output signals are proper and stable. At the same time, it is important that there are no malfunctions such as vacuum leaks, fouled spark plugs, or other malfunctions with the engine.

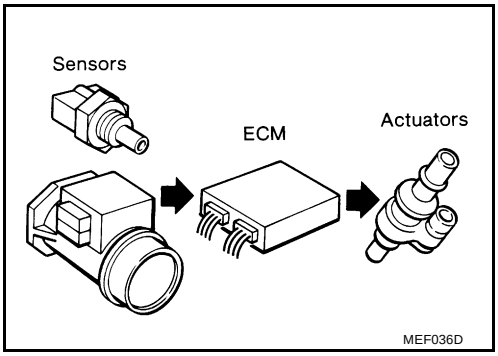

It is much more difficult to diagnose an incident that occurs intermittently rather than continuously. Most intermittent incidents are caused by poor electric connections or improper wiring. In this case, careful checking of suspected circuits may help prevent the replacement of good parts.

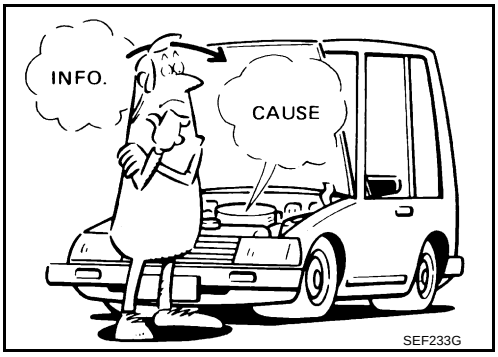

A visual check only may not find the cause of the incidents. A road test with CONSULT-II or a circuit tester connected should be performed. Follow the Work Flow on EC-286 .

Before undertaking actual checks, take a few minutes to talk with a customer who approaches with a driveability complaint. The customer can supply good information about such incidents, especially intermittent ones. Find out what symptoms are present and under what conditions they occur. A Diagnostic Worksheet like the example on EC-290 should be used.

Start your diagnosis by looking for conventional malfunctions first. This will help troubleshoot driveability malfunctions on an electronically controlled engine vehicle.

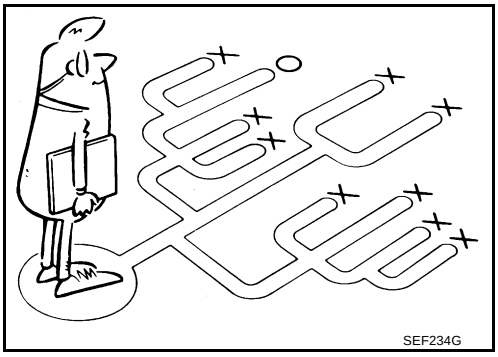

WORK FLOW
Overall Sequence

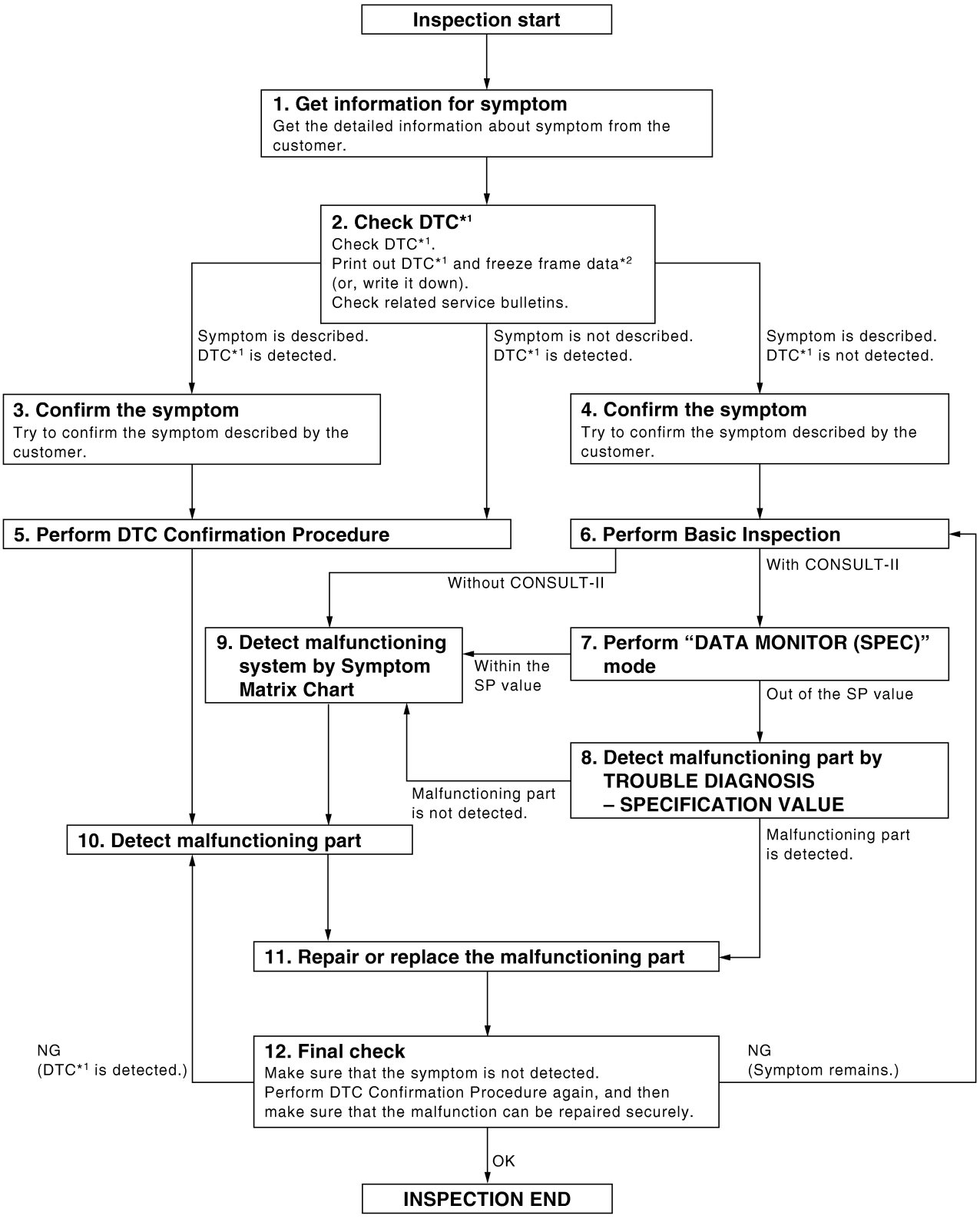

*1: Include 1st trip DTC.
*2: Include 1st trip freeze frame data.

PBIB3126E

Detailed Flow

1. GET INFORMATION FOR SYMPTOM

Get the detailed information from the customer about the symptom (the condition and the environment when the incident/malfunction occurred) using the EC-289, "DIAGNOSTIC WORKSHEET" .

>> GO TO 2.

2. CHECK DTC*1

1. Check DTC*1 .
2. Perform the following procedure if DTC*1 is displayed.

- Record DTC*1 and freeze frame data*2 . (Print them out with CONSULT-II.)
- Erase DTC*1 . (Refer to EC-283, "HOW TO ERASE EMISSION-RELATED DIAGNOSTIC INFORMATION" .)
- Study the relationship between the cause detected by DTC*1 and the symptom described by the customer. (Symptom Matrix Chart is useful. Refer to EC-298, "Symptom Matrix Chart" .)

3. Check related service bulletins for information.

Is any symptom described and any DTC detected?

Symptom is described, DTC*1 is displayed>>GO TO 3.
Symptom is described, DTC*1 is not displayed>>GO TO 4.
Symptom is not described, DTC*1 is displayed>>GO TO 5.

3. CONFIRM THE SYMPTOM

Try to confirm the symptom described by the customer (except MIL ON).
DIAGNOSIS WORK SHEET is useful to verify the incident.
Connect CONSULT-II to the vehicle in “DATA MONITOR (AUTO TRIG)” mode and check real time diagnosis results.
Verify relation between the symptom and the condition when the symptom is detected.

>> GO TO 5.

4. CONFIRM THE SYMPTOM

Try to confirm the symptom described by the customer.
DIAGNOSIS WORK SHEET is useful to verify the incident.
Connect CONSULT-II to the vehicle in “DATA MONITOR (AUTO TRIG)” mode and check real time diagnosis results.
Verify relation between the symptom and the condition when the symptom is detected.

>> GO TO 6.

5. PERFORM DTC CONFIRMATION PROCEDURE

Perform DTC Confirmation Procedure for the displayed DTC*1 , and then make sure that DTC*1 is detected again.
At this time, always connect CONSULT-II to the vehicle, and check diagnostic results in real time on “DATA MONITOR (AUTO TRIG)”.

If two or more DTCs*1 are detected, refer to EC-291, "DTC Inspection Priority Chart" and determine trouble diagnosis order.

NOTE:

- Freeze frame data*2 is useful if the DTC*1 is not detected.
- Perform Overall Function Check if DTC Confirmation Procedure is not included on Service Manual. This simplified check procedure is an effective alternative though DTC*1 cannot be detected during this check. If the result of Overall Function Check is NG, it is the same as the detection of DTC*1 by DTC Confirmation Procedure.

Is DTC*1 detected?

Yes >> GO TO 10.
No >> Check according to EC-338, "TROUBLE DIAGNOSIS FOR INTERMITTENT INCIDENT" .

6. PERFORM BASIC INSPECTION

Perform EC-293, "Basic Inspection" .

With CONSULT-II>>GO TO 7.
Without CONSULT-II>>GO TO 9.

7. PERFORM DATA MONITOR (SPEC) MODE

With CONSULT-II
Make sure that “MAS A/F SE-B1”, “B/FUEL SCHDL”, and “A/F ALPHA-B1”, “A/F ALPHA-B2” are within the SP value using CONSULT-II “DATA MONITOR (SPEC)” mode. Refer to EC-329, "Diagnostic Procedure" .

Are they within the SP value?

Yes >> GO TO 9.
No >> GO TO 8.

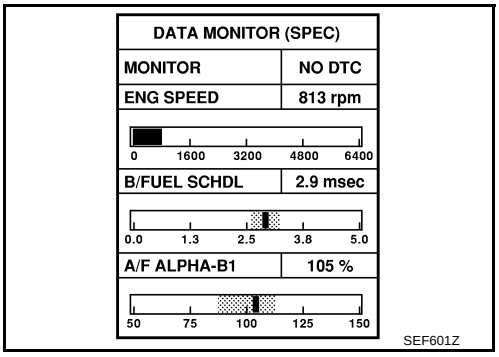

8. DETECT MALFUNCTIONING PART BY TROUBLE DIAGNOSIS - SPECIFICATION VALUE

Detect malfunctioning part according to EC-328, "TROUBLE DIAGNOSIS - SPECIFICATION VALUE" .

Is malfunctioning part detected?

Yes >> GO TO 11.
No >> GO TO 9.

9. DETECT MALFUNCTIONING SYSTEM BY SYMPTOM MATRIX CHART

Detect malfunctioning system according to EC-298, "Symptom Matrix Chart" based on the confirmed symptom in step 4, and determine the trouble diagnosis order based on possible causes and symptom.

>> GO TO 10.

10. DETECT MALFUNCTIONING PART

Inspect the system.

Is malfunctioning part detected?

Yes >> GO TO 11.

No >> Monitor input data from related sensors or check voltage of related ECM terminals using CONSULT-II. Refer to EC-323, "CONSULT-II Reference Value in Data Monitor" , EC-313, "ECM Terminals and Reference Value" .

11. REPAIR OR REPLACE THE MALFUNCTIONING PART

1. Repair or replace the malfunctioning part.
2. Reconnect parts or connectors after repair and replacement.
3. Check DTC. If DTC is displayed, erase it, refer to EC-283, "HOW TO ERASE EMISSION-RELATED DIAGNOSTIC INFORMATION" .

>> GO TO 12.

12. FINAL CHECK

When DTC was detected in step 2, perform DTC Confirmation Procedure or Overall Function Check again, and then make sure that the malfunction have been repaired securely.
When symptom was described from the customer, refer to confirmed symptom in step 3 or 4, and make sure that the symptom is not detected.

OK or NG

NG (DTC*1 is detected)>>GO TO 10.
NG (Symptom remains)>>GO TO 6.
OK >> 1. Before returning the vehicle to the customer, make sure to erase unnecessary DTC*1 in ECM. (Refer to EC-283, "How to Erase DTC" .)
2. **INSPECTION END**

*1: Include 1st trip DTC.
*2: Include 1st trip freeze frame data.

DIAGNOSTIC WORKSHEET

Description

There are many operating conditions that lead to the malfunction of engine components. A good grasp of such conditions can make troubleshooting faster and more accurate.
In general, each customer feels differently about a incident. It is important to fully understand the symptoms or conditions for a customer complaint.
Utilize a diagnostic worksheet like the one on the next page in order to organize all the information for troubleshooting.
Some conditions may cause the MIL to come on steady or blink and DTC to be detected. Examples:

- Vehicle ran out of fuel, which caused the engine to misfire.

KEY POINTS

WHAT ..... Vehicle & engine model
WHEN ..... Date, Frequencies
WHERE..... Road conditions
HOW ..... Operating conditions, Weather conditions, Symptoms

SEF907L

Worksheet Sample

Customer name MR/MS		Model & Year	VIN
Engine #		Trans.	Mileage
Incident Date		Manuf. Date	In Service Date
Fuel and fuel filler cap		☐ Vehicle ran out of fuel causing misfire ☐ Fuel filler cap was left off or incorrectly screwed on.	
Symptoms	☐ Startability	☐ Impossible to start ☐ No combustion ☐ Partial combustion ☐ Partial combustion affected by throttle position ☐ Partial combustion NOT affected by throttle position ☐ Possible but hard to start ☐ Others [ ]	
	☐ Idling	☐ No fast idle ☐ Unstable ☐ High idle ☐ Low idle ☐ Others [ ]	
	☐ Driveability	☐ Stumble ☐ Surge ☐ Knock ☐ Lack of power ☐ Intake backfire ☐ Exhaust backfire ☐ Others [ ]	
	☐ Engine stall	☐ At the time of start ☐ While idling ☐ While accelerating ☐ While decelerating ☐ Just after stopping ☐ While loading	
Incident occurrence		☐ Just after delivery ☐ Recently ☐ In the morning ☐ At night ☐ In the daytime	
Frequency		☐ All the time ☐ Under certain conditions ☐ Sometimes	
Weather conditions		☐ Not affected	
	Weather	☐ Fine ☐ Raining ☐ Snowing ☐ Others [ ]	
	Temperature	☐ Hot ☐ Warm ☐ Cool ☐ Cold ☐ Humid ˚F	
Engine conditions		☐ Cold ☐ During warm-up ☐ After warm-up Engine speed 0 2,000 4,000 6,000 8,000 rpm	
Road conditions		☐ In town ☐ In suburbs ☐ Highway ☐ Off road (up/down)	
Driving conditions		☐ Not affected ☐ At starting ☐ While idling ☐ At racing ☐ While accelerating ☐ While cruising ☐ While decelerating ☐ While turning (RH/LH) Vehicle speed 0 10 20 30 40 50 60 MPH	
Malfunction indicator lamp		☐ Turned on ☐ Not turned on	

MTBL0017

DTC Inspection Priority Chart

ABS00GT0

If some DTCs are displayed at the same time, perform inspections one by one based on the following priority chart.

NOTE:
If DTC U1000 and/or U1001 is displayed with other DTC, first perform the trouble diagnosis for DTC U1000, U1001. Refer to EC-352 .

Priority	Detected items (DTC)
1	● U1000 U1001 CAN communication line ● P0102 P0103 Mass air flow sensor ● P0117 P0118 Engine coolant temperature sensor ● P0122 P0123 P0222 P0223 P1225 P1226 P2135 Throttle position sensor ● P0327 P0328 Knock sensor ● P0335 Crankshaft position sensor (POS) ● P0340 P0345 Camshaft position sensor (PHASE) ● P0605 ECM ● P1229 Sensor power supply ● P1610 - P1615 NATS ● P1700 CVT control system ● P1706 Park/Neutral position (PNP) switch ● P2122 P2123 P2127 P2128 P2138 Accelerator pedal position sensor
2	● P0138 P0158 Heated oxygen sensor 2 ● P0550 Power steering pressure sensor ● P1031 P1032 P1051 P1052 A/F sensor 1 heater ● P1065 ECM power supply ● P1111 P1136 Intake valve timing control solenoid valve ● P1122 Electric throttle control function ● P1124 P1126 P1128 Electric throttle control actuator ● P1217 Engine over temperature (OVERHEAT) ● P1271 P1272 P1276 P1281 P1282 P1286 A/F sensor 1 ● P1720 Vehicle speed sensor ● P1805 Brake switch
3	● P0011 P0021 Intake valve timing control ● P1121 Electric throttle control actuator ● P1211 TCS control unit ● P1212 TCS communication line ● P1564 ASCD steering switch ● P1572 ASCD brake switch ● P1574 ASCD vehicle speed sensor ● P1715 Primary speed sensor

Fail-Safe Chart

ABS00GT1

When the DTC listed below is detected, the ECM enters fail-safe mode and the MIL lights up.

DTC No.	Detected items	Engine operating condition in fail-safe mode
P0102 P0103	Mass air flow sensor circuit	Engine speed will not rise more than 2,400 rpm due to the fuel cut.
P0122 P0123 P0222 P0223 P2135	Throttle position sensor	The ECM controls the electric throttle control actuator in regulating the throttle opening in order for the idle position to be within +10 degrees. The ECM regulates the opening speed of the throttle valve to be slower than the normal condition. So, the acceleration will be poor.
P1121	Electric throttle control actuator	(When electric throttle control actuator does not function properly due to the return spring malfunction:) ECM controls the electric throttle actuator by regulating the throttle opening around the idle position. The engine speed will not rise more than 2,000 rpm.
		(When throttle valve opening angle in fail-safe mode is not in specified range:) ECM controls the electric throttle control actuator by regulating the throttle opening to 20 degrees or less.
		(When ECM detects the throttle valve is stuck open:) While the vehicle is driving, it slows down gradually by fuel cut. After the vehicle stops, the engine stalls. The engine can restart in N or P position, and engine speed will not exceed 1,000 rpm or more.
P1122	Electric throttle control function	ECM stops the electric throttle control actuator control, throttle valve is maintained at a fixed opening (approx. 5 degrees) by the return spring.
P1124 P1126	Throttle control motor relay	ECM stops the electric throttle control actuator control, throttle valve is maintained at a fixed opening (approx. 5 degrees) by the return spring.
P1128	Throttle control motor	ECM stops the electric throttle control actuator control, throttle valve is maintained at a fixed opening (approx. 5 degrees) by the return spring.
P1229	Sensor power supply	ECM stops the electric throttle control actuator control, throttle valve is maintained at a fixed opening (approx. 5 degrees) by the return spring.
P1805	Brake switch	ECM controls the electric throttle control actuator by regulating the throttle opening to a small range. Therefore, acceleration will be poor.
		Vehicle condition: Driving condition
		When engine is idling: Normal
		When accelerating: Poor acceleration
P2122 P2123 P2127 P2128 P2138	Accelerator pedal position sensor	The ECM controls the electric throttle control actuator in regulating the throttle opening in order for the idle position to be within +10 degrees. The ECM regulates the opening speed of the throttle valve to be slower than the normal condition. So, the acceleration will be poor.

- When there is an open circuit on MIL circuit, the ECM cannot warn the driver by lighting up MIL when there is malfunction on engine control system.
  Therefore, when electrical controlled throttle and part of ECM related diagnoses are continuously detected as NG for 5 trips, ECM warns the driver that engine control system malfunctions and MIL circuit is open by means of operating fail-safe function.
  The fail-safe function also operates when above diagnoses except MIL circuit are detected and demands the driver to repair the malfunction.

Engine operating condition in fail-safe mode	Engine speed will not rise more than 2,500 rpm due to the fuel cut

Basic Inspection

ABS00H2M

1. INSPECTION START

1. Check service records for any recent repairs that may indicate a related malfunction, or a current need for scheduled maintenance.
2. Open engine hood and check the following:
   - Harness connectors for improper connections
   - Wiring harness for improper connections, pinches and cut
   - Vacuum hoses for splits, kinks and improper connections
   - Hoses and ducts for leaks
   - Air cleaner clogging
   - Gasket
3. Confirm that electrical or mechanical loads are not applied.
   - Headlamp switch is OFF.
   - Air conditioner switch is OFF.
   - Rear window defogger switch is OFF.
   - Steering wheel is in the straight-ahead position, etc.
4. Start engine and warm it up until engine coolant temperature indicator points the middle of gauge.
   Ensure engine stays below 1,000 rpm.

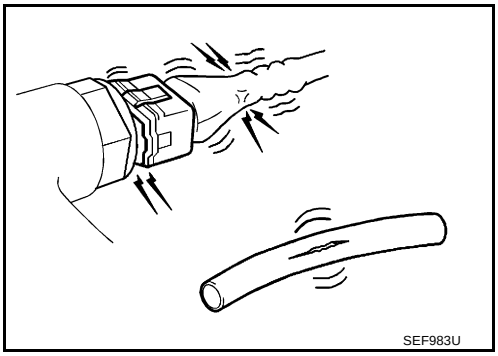
SEF983U

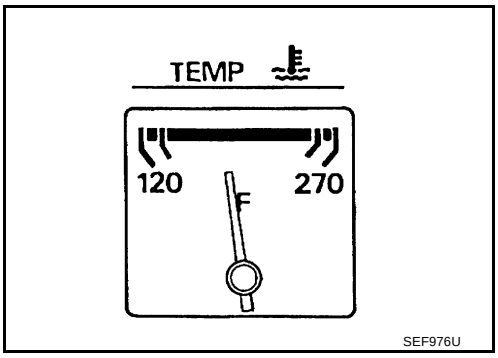

SEF976U

5. Run engine at about 2,000 rpm for about 2 minutes under no-load.
6. Make sure that no DTC is displayed with CONSULT-II or ECM [Diagnostic Test Mode II (Self-diagnostic results)].

OK or NG

OK >> GO TO 3.
NG >> GO TO 2.

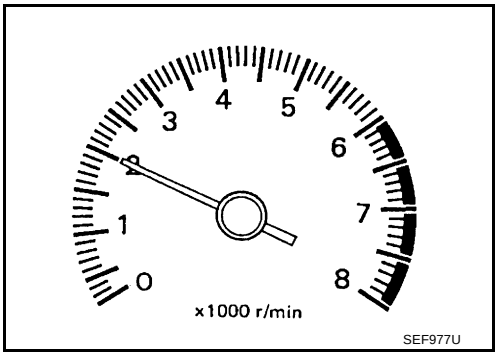

SEF977U

2. REPAIR OR REPLACE

Repair or replace components as necessary.

>> GO TO 3.

3. CHECK TARGET IDLE SPEED

With CONSULT-II

1. Run engine at about 2,000 rpm for about 2 minutes under no-load.
2. Rev engine (2,000 to 3,000 rpm) two or three times under no-load, then run engine at idle speed for about 1 minute.

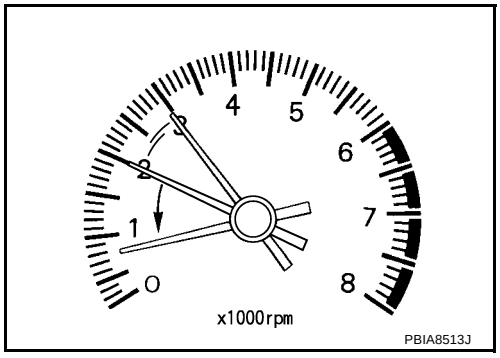

3. Read idle speed in “DATA MONITOR” mode with CONSULT-II.

   625 ± 50 rpm (in P or N position)

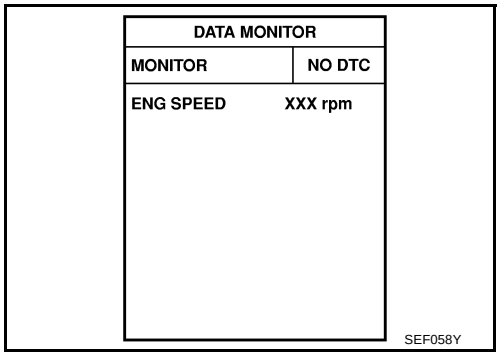

Without CONSULT-II

1. Run engine at about 2,000 rpm for about 2 minutes under no-load.
2. Rev engine (2,000 to 3,000 rpm) two or three times under no-load, then run engine at idle speed for about 1 minute.
3. Check idle speed.

   625 ± 50 rpm (in P or N position)

OK or NG

OK >> GO TO 10.
NG >> GO TO 4.

4. PERFORM ACCELERATOR PEDAL RELEASED POSITION LEARNING

1. Stop engine.
2. Perform Accelerator Pedal Released Position Learning.

>> GO TO 5.

5. PERFORM THROTTLE VALVE CLOSED POSITION LEARNING

Perform Throttle Valve Closed Position Learning.

>> GO TO 6.

6. PERFORM IDLE AIR VOLUME LEARNING

Perform Idle Air Volume Learning.
Is Idle Air Volume Learning carried out successfully?

Yes or No

Yes >> GO TO 7.
No >> 1. Follow the instruction of Idle Air Volume Learning.
2. GO TO 4.

7. CHECK TARGET IDLE SPEED AGAIN

With CONSULT-II

1. Start engine and warm it up to normal operating temperature.
2. Read idle speed in “DATA MONITOR” mode with CONSULT-II.

625 ± 50 rpm (in P or N position)

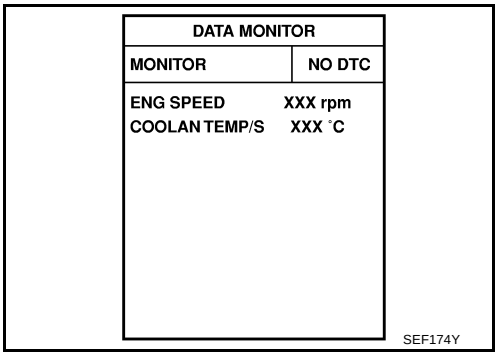

DATA MONITOR	
MONITOR	NO DTC
ENG SPEED	XXX rpm
COOLAN TEMP/S	XXX °C

SEF174Y

Without CONSULT-II

1. Start engine and warm it up to normal operating temperature.
2. Check idle speed.

625 ± 50 rpm (in P or N position)

OK or NG

OK >> GO TO 10.
NG >> GO TO 8.

8. DETECT MALFUNCTIONING PART

Check the following.

- Check camshaft position sensor (PHASE) and circuit. Refer to EC-385 .
- Check crankshaft position sensor (POS) and circuit. Refer to EC-381 .

OK or NG

OK >> GO TO 9.
NG >> 1. Repair or replace.
2. GO TO 4.

9. CHECK ECM FUNCTION

1. Substitute another known-good ECM to check ECM function. (ECM may be the cause of an incident, but this is a rare case.)
2. Perform initialization of NATS system and registration of all NATS ignition key IDs. Refer to BL-116, "NATS(Nissan Anti-Theft System)" .

>> GO TO 4.

10. CHECK IGNITION TIMING

1. Run engine at idle.
2. Check ignition timing with a timing light.

15 ± 5° BTDC (in P or N position)

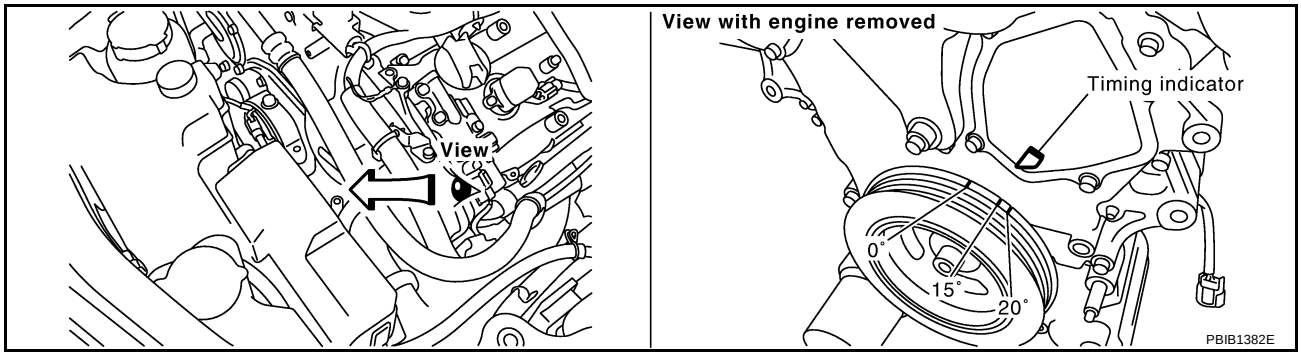

OK or NG

OK >> **INSPECTION END**
NG >> GO TO 11.

11. PERFORM ACCELERATOR PEDAL RELEASED POSITION LEARNING

1. Stop engine.
2. Perform Accelerator Pedal Released Position Learning.

>> GO TO 12.

12. PERFORM THROTTLE VALVE CLOSED POSITION LEARNING

Perform Throttle Valve Closed Position Learning.

>> GO TO 13.

13. PERFORM IDLE AIR VOLUME LEARNING

Perform Idle Air Volume Learning.
Is Idle Air Volume Learning carried out successfully?

Yes or No

Yes >> GO TO 14.
No >> 1. Follow the instruction of Idle Air Volume Learning.
2. GO TO 4.

14. CHECK TARGET IDLE SPEED AGAIN

With CONSULT-II

1. Start engine and warm it up to normal operating temperature.
2. Read idle speed in “DATA MONITOR” mode with CONSULT-II.

625 ± 50 rpm (in P or N position)

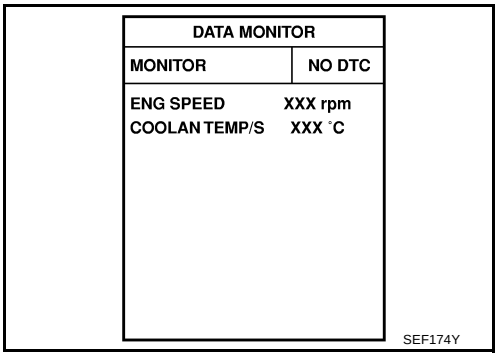

DATA MONITOR	
MONITOR	NO DTC
ENG SPEED	XXX rpm
COOLAN TEMP/S	XXX °C

SEF174Y

Without CONSULT-II

1. Start engine and warm it up to normal operating temperature.
2. Check idle speed.

625 ± 50 rpm (in P or N position)

OK or NG

OK >> GO TO 15.
NG >> GO TO 17.

15. CHECK IGNITION TIMING AGAIN

1. Run engine at idle.
2. Check ignition timing with a timing light.

15 ± 5° BTDC (in P or N position)

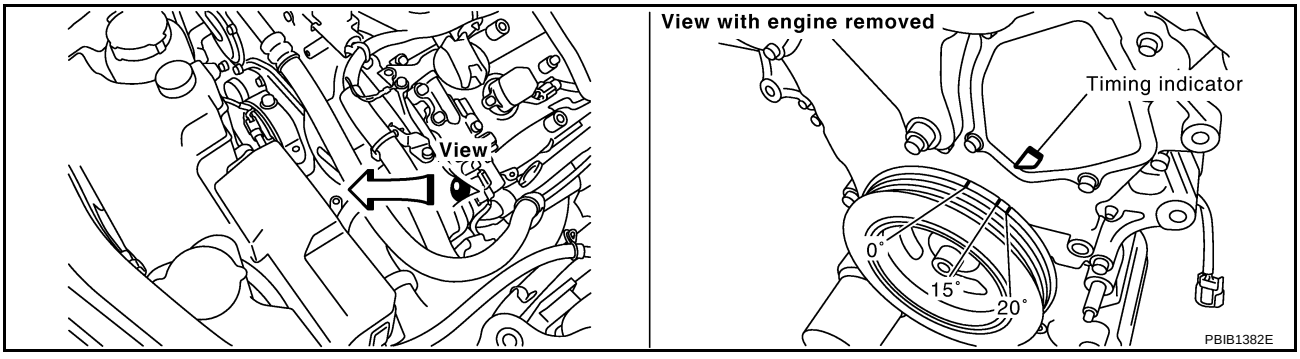

OK or NG

OK >> **INSPECTION END**
NG >> GO TO 16.

16. CHECK TIMING CHAIN INSTALLATION

Check timing chain installation. Refer to EM-19, "TIMING CHAIN" .

OK or NG

OK >> GO TO 17.
NG >> 1. Repair the timing chain installation.
2. GO TO 4.

17. DETECT MALFUNCTIONING PART

Check the following.

- Check camshaft position sensor (PHASE) and circuit. Refer to EC-385 .
- Check crankshaft position sensor (POS) and circuit. Refer to EC-381 .

OK or NG

OK >> GO TO 18.
NG >> 1. Repair or replace.
2. GO TO 4.

18. CHECK ECM FUNCTION

1. Substitute another known-good ECM to check ECM function. (ECM may be the cause of an incident, but this is a rare case.)
2. Perform initialization of NATS system and registration of all NATS ignition key IDs. Refer to BL-116, "NATS(Nissan Anti-Theft System)" .

>> GO TO 4.

Symptom Matrix Chart

ABS00GT2

SYSTEM — BASIC ENGINE CONTROL SYSTEM

		SYMPTOM												
		HARD/NO START/RESTART (EXCP. HA)	ENGINE STALL	HESITATION/SURGING/FLAT SPOT	SPARK KNOCK/DETONATION	LACK OF POWER/POOR ACCELERATION	HIGH IDLE/LOW IDLE	ROUGH IDLE/HUNTING	IDLING VIBRATION	SLOW/NO RETURN TO IDLE	OVERHEATS/WATER TEMPERATURE HIGH	EXCESSIVE FUEL CONSUMPTION	EXCESSIVE OIL CONSUMPTION	BATTERY DEAD (UNDER CHARGE)
Warranty symptom code		AA	AB	AC	AD	AE	AF	AG	AH	AJ	AK	AL	AM	HA
Fuel	Fuel pump circuit	1	1	2	3	2		2	2			3		2
	Fuel pressure regulator system	3	3	4	4	4	4	4	4	4		4		
	Injector circuit	1	1	2	3	2		2	2			2		
	Evaporative emission system	3	3	4	4	4	4	4	4	4		4		
Air	Positive crankcase ventilation system	3	3	4	4	4	4	4	4	4		4	1	
	Incorrect idle speed adjustment						1	1	1	1		1		
	Electric throttle control actuator	1	1	2	3	3	2	2	2	2		2		2
Ignition	Incorrect ignition timing adjustment	3	3	1	1	1		1	1			1		
	Ignition circuit	1	1	2	2	2		2	2			2		
Power supply and ground circuit		2	2	3	3	3		3	3		2	3		
Mass air flow sensor circuit		1	1	2	2	2		2	2			2		
Engine coolant temperature sensor circuit					3		3			3				
Air fuel ratio (A/F) sensor 1 circuit														
Throttle position sensor circuit							2			2				
Accelerator pedal position sensor circuit				3	2	1								
Knock sensor circuit				2								3		
Crankshaft position sensor (POS) circuit		2	2											
Camshaft position sensor (PHASE) circuit		3	2											
Vehicle speed signal circuit			2	3		3						3		
Power steering pressure sensor circuit			2					3	3					
ECM		2	2	3	3	3	3	3	3	3	3	3		
Intake valve timing control solenoid valve circuit			3	2		1	3	2	2	3		3		
Park/neutral position switch circuit				3		3		3	3			3		

	SYMPTOM												
	HARD/NO START/RESTART (EXCP. HA)	ENGINE STALL	HESITATION/SURGING/FLAT SPOT	SPARK KNOCK/DETONATION	LACK OF POWER/POOR ACCELERATION	HIGH IDLE/LOW IDLE	ROUGH IDLE/HUNTING	IDLING VIBRATION	SLOW/NO RETURN TO IDLE	OVERHEATS/WATER TEMPERATURE HIGH	EXCESSIVE FUEL CONSUMPTION	EXCESSIVE OIL CONSUMPTION	BATTERY DEAD (UNDER CHARGE)
Warranty symptom code	AA	AB	AC	AD	AE	AF	AG	AH	AJ	AK	AL	AM	HA
VIAS control solenoid valve circuit					1								
Refrigerant pressure sensor circuit		2				3			3		4		
Electrical load signal circuit							3						
Air conditioner circuit	2	2	3	3	3	3	3	3	3		3		2
ABS actuator and electric unit (control unit)			4										

1 - 6: The numbers refer to the order of inspection.
(continued on next page)

SYSTEM — ENGINE MECHANICAL & OTHER

		SYMPTOM												
		HARD/NO START/RESTART (EXCP. HA)	ENGINE STALL	HESITATION/SURGING/FLAT SPOT	SPARK KNOCK/DETONATION	LACK OF POWER/POOR ACCELERATION	HIGH IDLE/LOW IDLE	ROUGH IDLE/HUNTING	IDLING VIBRATION	SLOW/NO RETURN TO IDLE	OVERHEATS/WATER TEMPERATURE HIGH	EXCESSIVE FUEL CONSUMPTION	EXCESSIVE OIL CONSUMPTION	BATTERY DEAD (UNDER CHARGE)
Warranty symptom code		AA	AB	AC	AD	AE	AF	AG	AH	AJ	AK	AL	AM	HA
Fuel	Fuel tank	5	5											
	Fuel piping			5	5	5		5	5			5		
	Vapor lock													
	Valve deposit	5		5	5	5		5	5			5		
	Poor fuel (Heavy weight gasoline, Low octane)													

		SYMPTOM												
		HARD/NO START/RESTART (EXCP. HA)	ENGINE STALL	HESITATION/SURGING/FLAT SPOT	SPARK KNOCK/DETONATION	LACK OF POWER/POOR ACCELERATION	HIGH IDLE/LOW IDLE	ROUGH IDLE/HUNTING	IDLING VIBRATION	SLOW/NO RETURN TO IDLE	OVERHEATS/WATER TEMPERATURE HIGH	EXCESSIVE FUEL CONSUMPTION	EXCESSIVE OIL CONSUMPTION	BATTERY DEAD (UNDER CHARGE)
Warranty symptom code		AA	AB	AC	AD	AE	AF	AG	AH	AJ	AK	AL	AM	HA
Air	Air duct		5	5		5		5	5			5		
	Air cleaner													
	Air leakage from air duct (Mass air flow sensor — electric throttle control actuator)	5			5		5			5				
	Electric throttle control actuator													
	Air leakage from intake manifold/Collector/Gasket													
Cranking	Battery	1	1	1		1		1	1			1		1
	Generator circuit													
	Starter circuit	3												
	Signal plate	6												
	PNP switch	4												
Engine	Cylinder head	5	5	5	5	5		5	5			5		
	Cylinder head gasket										4		3	
	Cylinder block	6	6	6	6	6		6	6			6	4	
	Piston													
	Piston ring													
	Connecting rod													
	Bearing													
	Crankshaft													
Valve mechanism	Timing chain	5	5	5	5	5		5	5			5		
	Camshaft													
	Intake valve timing control													
	Intake valve												3	
	Exhaust valve													
Exhaust	Exhaust manifold/Tube/Muffler/Gasket	5	5	5	5	5		5	5			5		
	Three way catalyst													
Lubrication	Oil pan/Oil strainer/Oil pump/Oil filter/Oil gallery/Oil cooler	5	5	5	5	5		5	5			5		
	Oil level (Low)/Filthy oil													

		SYMPTOM												
		HARD/NO START/RESTART (EXCP. HA)	ENGINE STALL	HESITATION/SURGING/FLAT SPOT	SPARK KNOCK/DETONATION	LACK OF POWER/POOR ACCELERATION	HIGH IDLE/LOW IDLE	ROUGH IDLE/HUNTING	IDLING VIBRATION	SLOW/NO RETURN TO IDLE	OVERHEATS/WATER TEMPERATURE HIGH	EXCESSIVE FUEL CONSUMPTION	EXCESSIVE OIL CONSUMPTION	BATTERY DEAD (UNDER CHARGE)
Warranty symptom code		AA	AB	AC	AD	AE	AF	AG	AH	AJ	AK	AL	AM	HA
Cooling	Radiator/Hose/Radiator filler cap	5	5	5	5	5		5	5		4	5		
	Thermostat									5				
	Water pump													
	Water gallery													
	Cooling fan									5				
	Coolant level (Low)/Contaminated coolant									5				
NATS (Nissan Anti-theft system)		1	1											

1 - 6: The numbers refer to the order of inspection.

Engine Control Component Parts Location

ABS00GT3

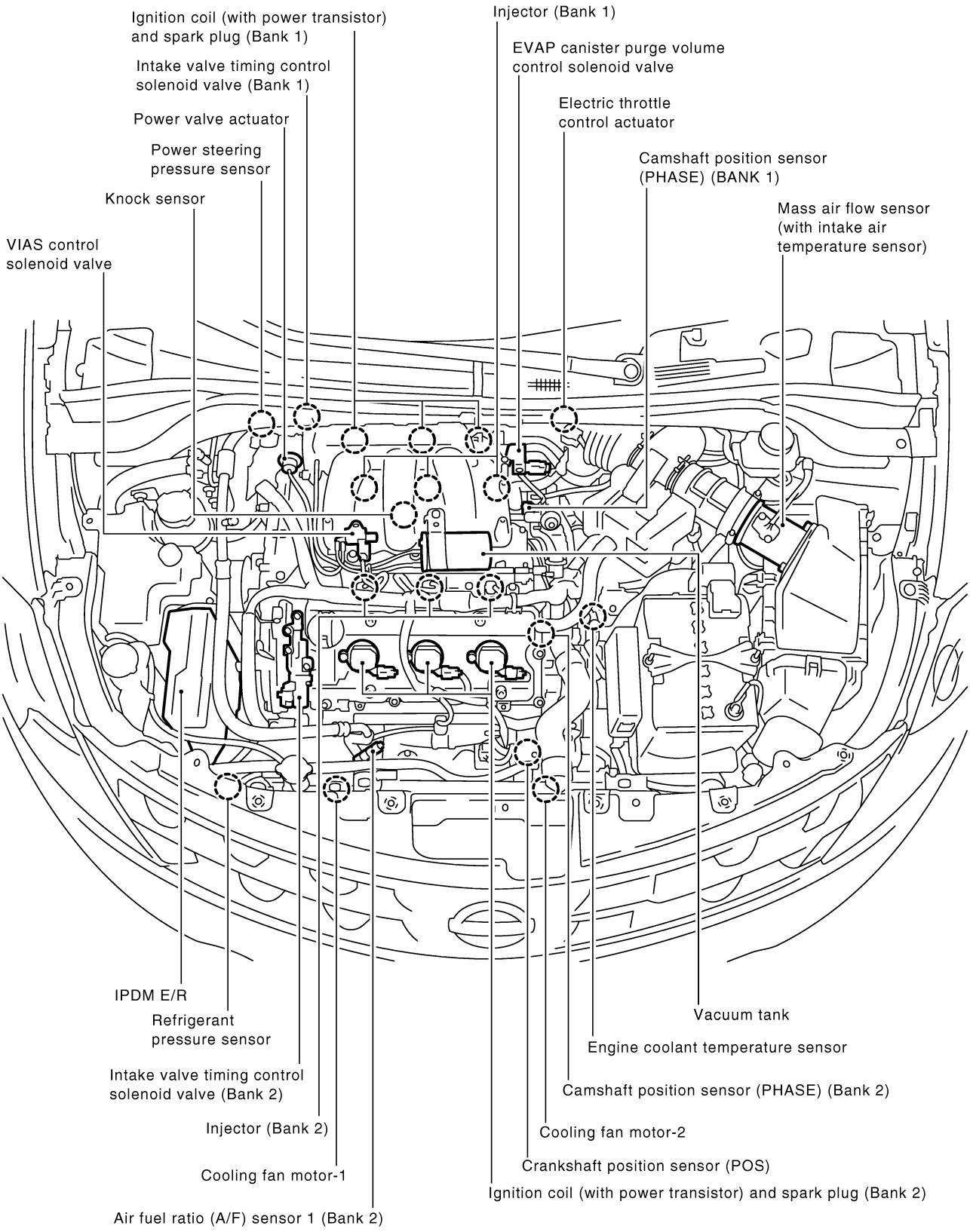

PBIB2666E

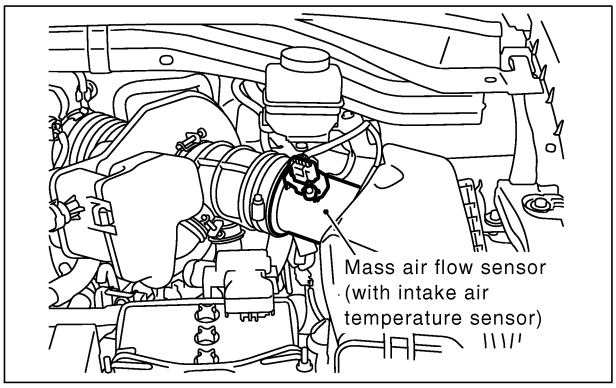
Mass air flow sensor
(with intake air
temperature sensor)

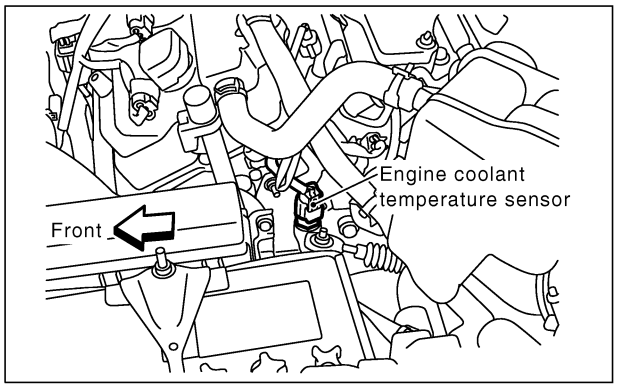
Engine coolant
temperature sensor
Front

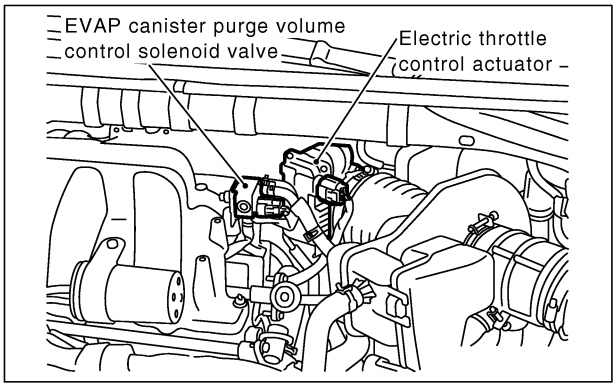
EVAP canister purge volume
control solenoid valve
Electric throttle
control actuator

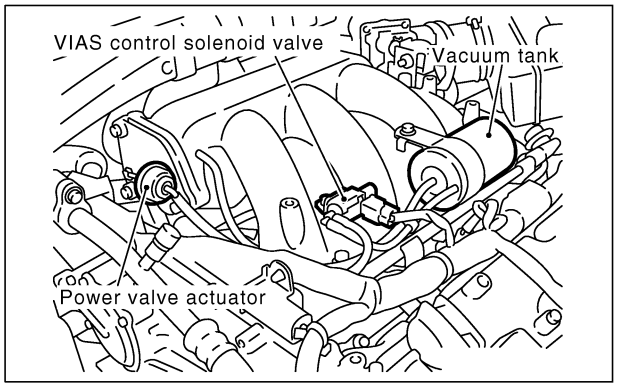
VIAS control solenoid valve
Vacuum tank
Power valve actuator

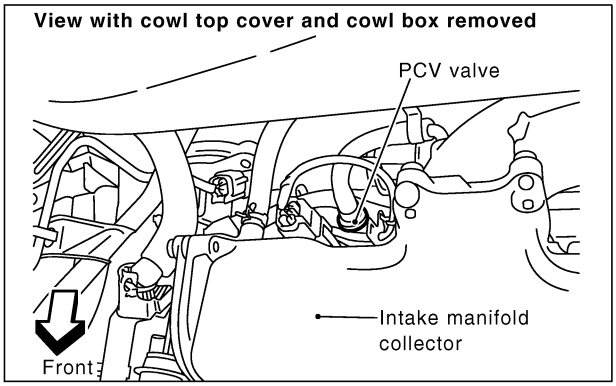
View with cowl top cover and cowl box removed
PCV valve
Intake manifold
collector
Front

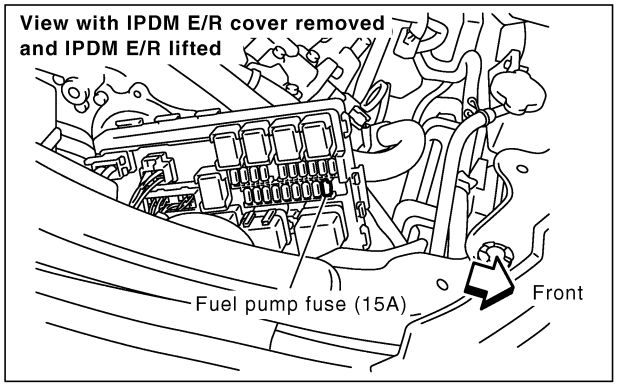
View with IPDM E/R cover removed
and IPDM E/R lifted
Fuel pump fuse (15A)
Front

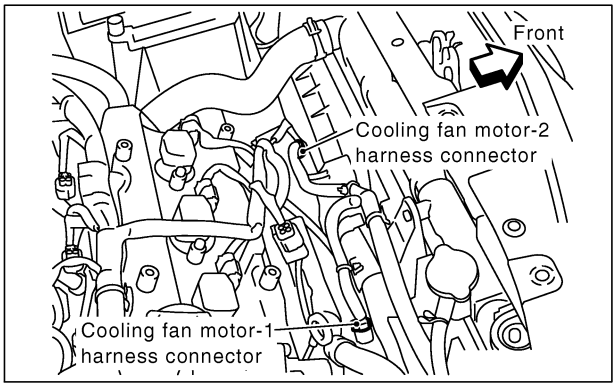
Front
Cooling fan motor-2
harness connector
Cooling fan motor-1
harness connector

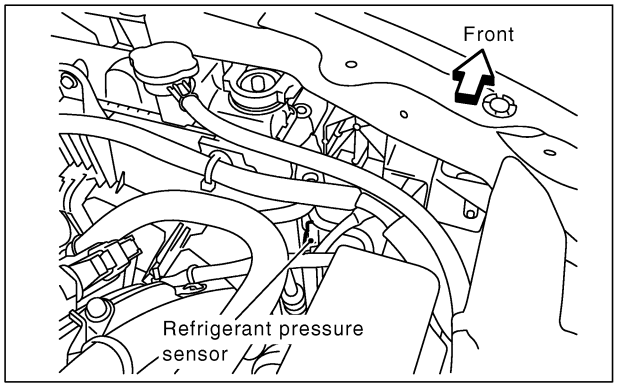
Front
Refrigerant pressure
sensor

PBIB2667E

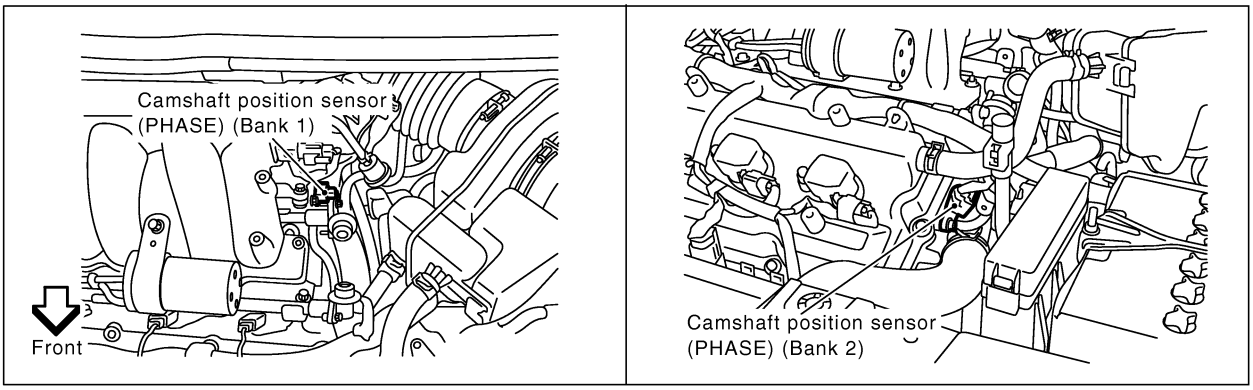
Camshaft position sensor
(PHASE) (Bank 1)
Front
Camshaft position sensor
(PHASE) (Bank 2)

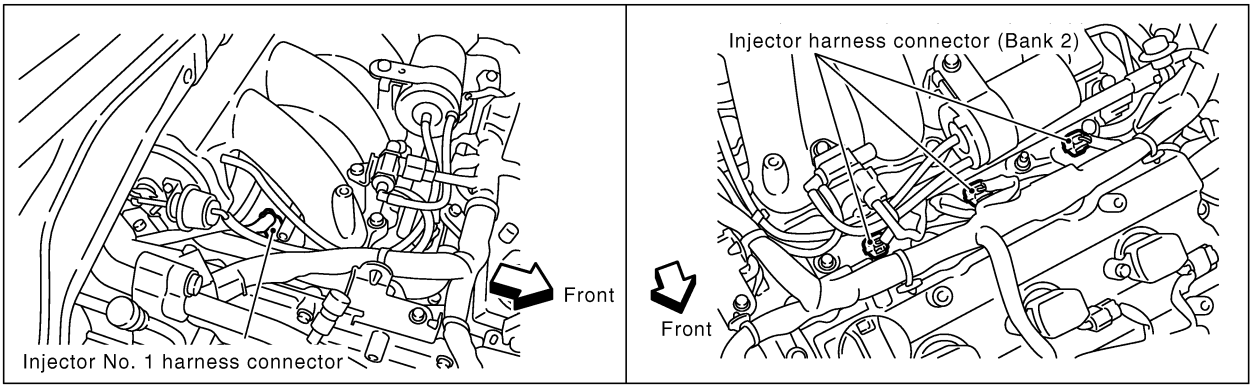
Front
Injector No. 1 harness connector
Injector harness connector (Bank 2)
Front

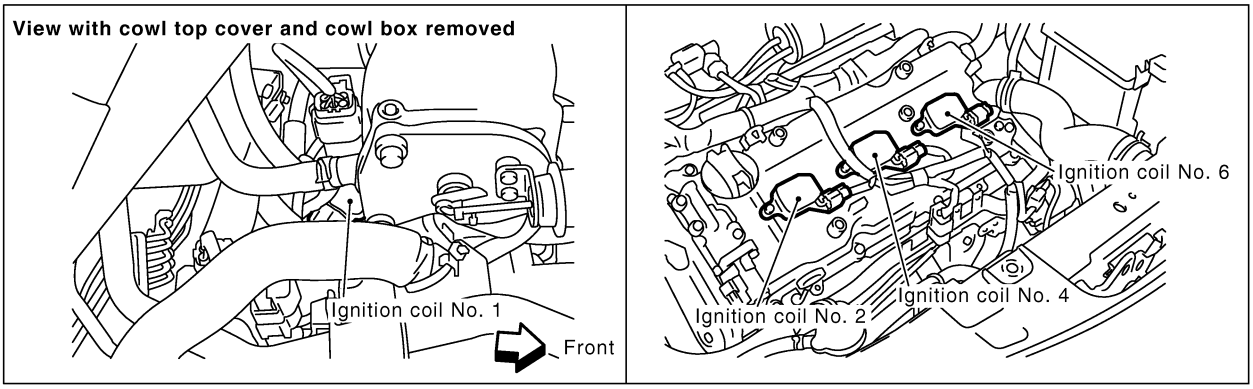
View with cowl top cover and cowl box removed
Ignition coil No. 1
Front
Ignition coil No. 6
Ignition coil No. 4
Ignition coil No. 2

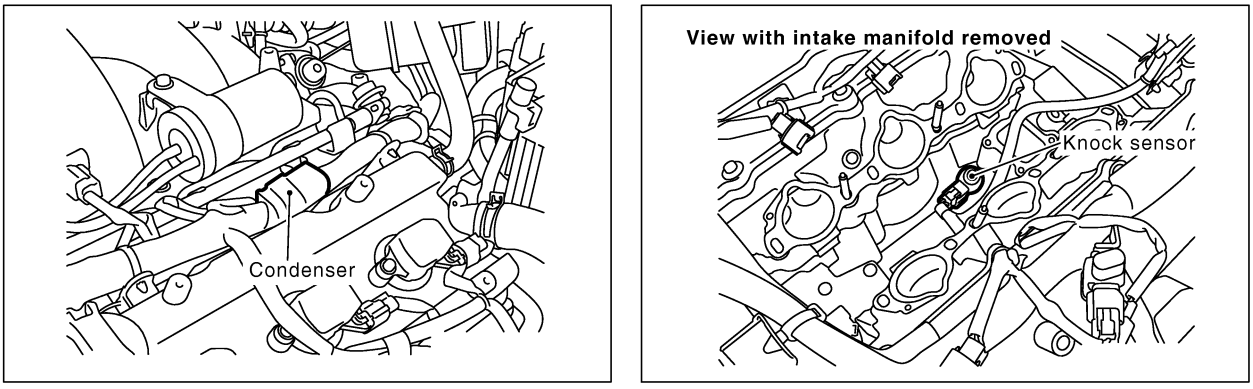
Condenser
View with intake manifold removed
Knock sensor

PBIB2669E

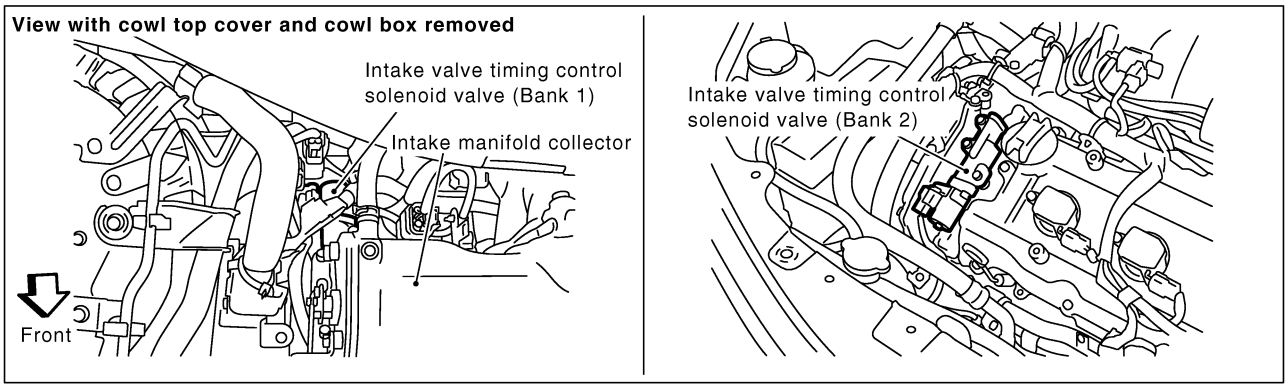
View with cowl top cover and cowl box removed
Intake valve timing control solenoid valve (Bank 1)
Intake manifold collector
Front
Intake valve timing control solenoid valve (Bank 2)

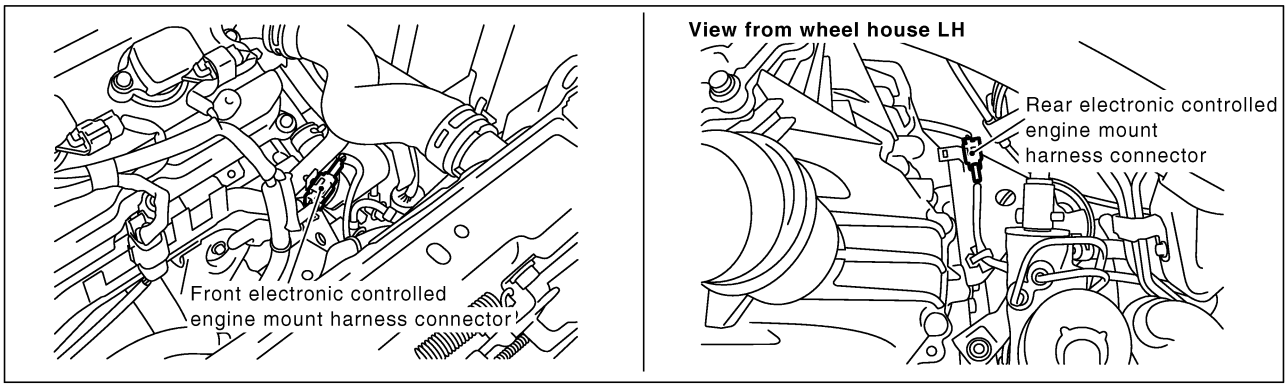
Front electronic controlled engine mount harness connector
View from wheel house LH
Rear electronic controlled engine mount harness connector

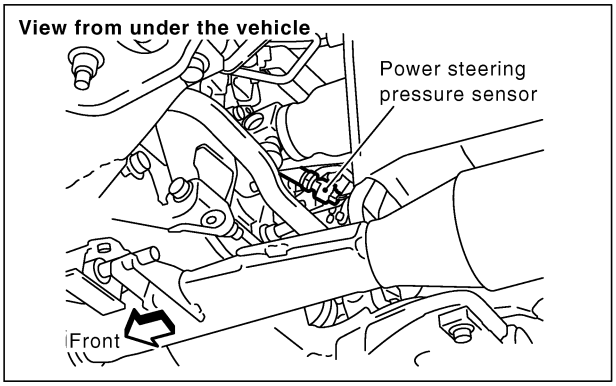
View from under the vehicle
Power steering pressure sensor
Front

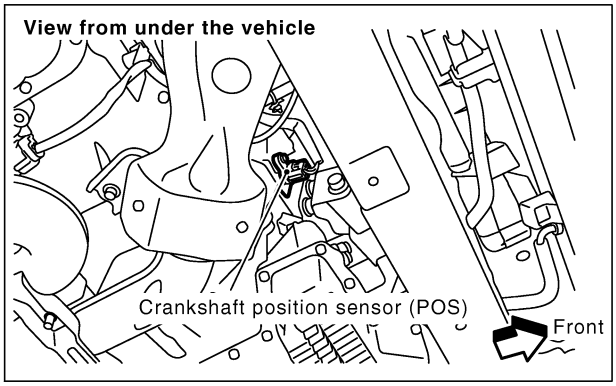
View from under the vehicle
Crankshaft position sensor (POS)
Front

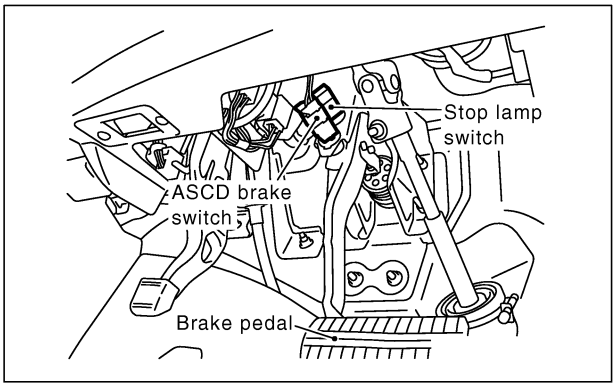
Stop lamp switch
ASCD brake switch
Brake pedal

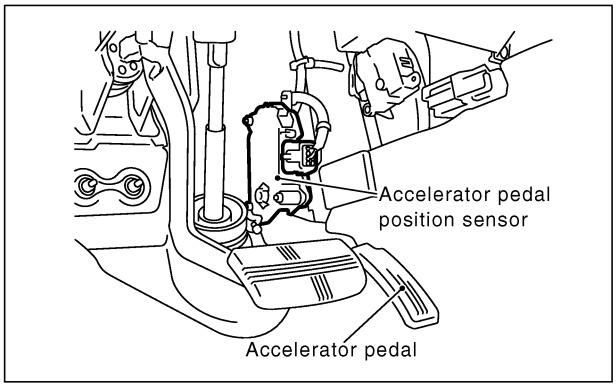
Accelerator pedal position sensor
Accelerator pedal

PBIB2670E

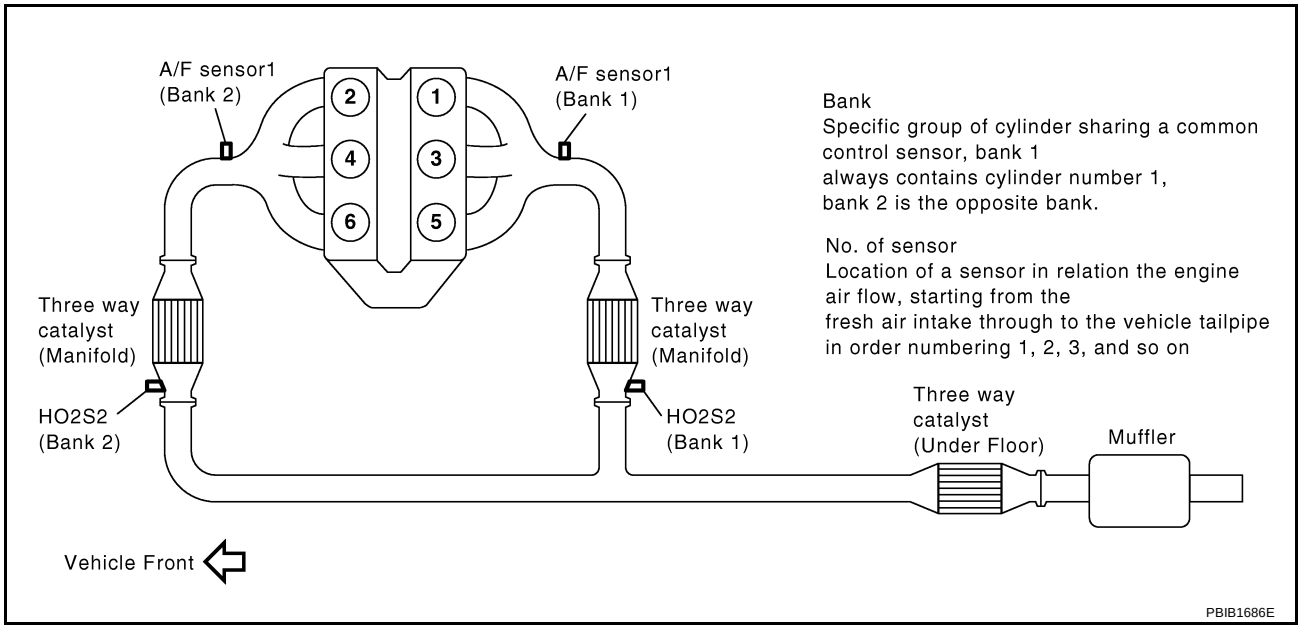
A/F sensor1
(Bank 2)
A/F sensor1
(Bank 1)
2
1
4
3
6
5
Bank
Specific group of cylinder sharing a common control sensor, bank 1 always contains cylinder number 1, bank 2 is the opposite bank.
No. of sensor
Location of a sensor in relation the engine air flow, starting from the fresh air intake through to the vehicle tailpipe in order numbering 1, 2, 3, and so on
Three way catalyst (Manifold)
Three way catalyst (Manifold)
HO2S2 (Bank 2)
HO2S2 (Bank 1)
Three way catalyst (Under Floor)
Muffler
Vehicle Front
PBIB1686E

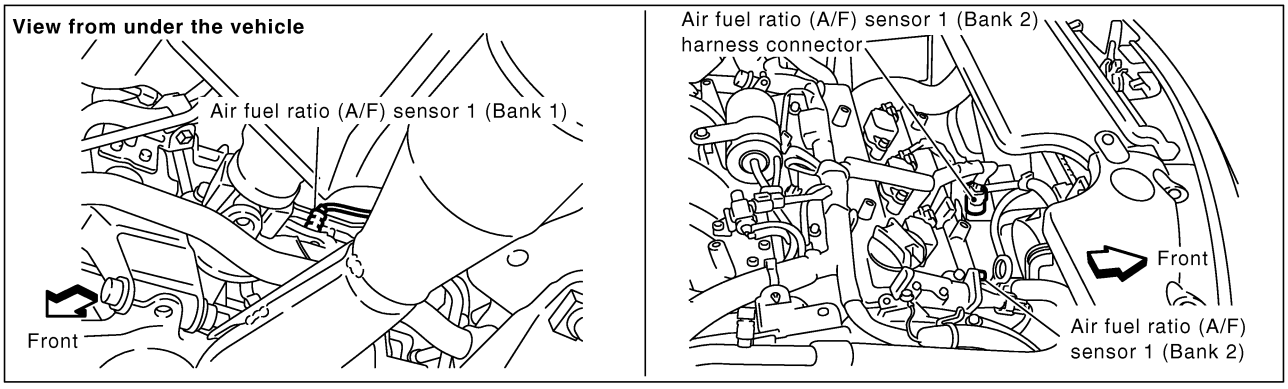
View from under the vehicle
Air fuel ratio (A/F) sensor 1 (Bank 1)
Front
Air fuel ratio (A/F) sensor 1 (Bank 2) harness connector
Front
Air fuel ratio (A/F) sensor 1 (Bank 2)

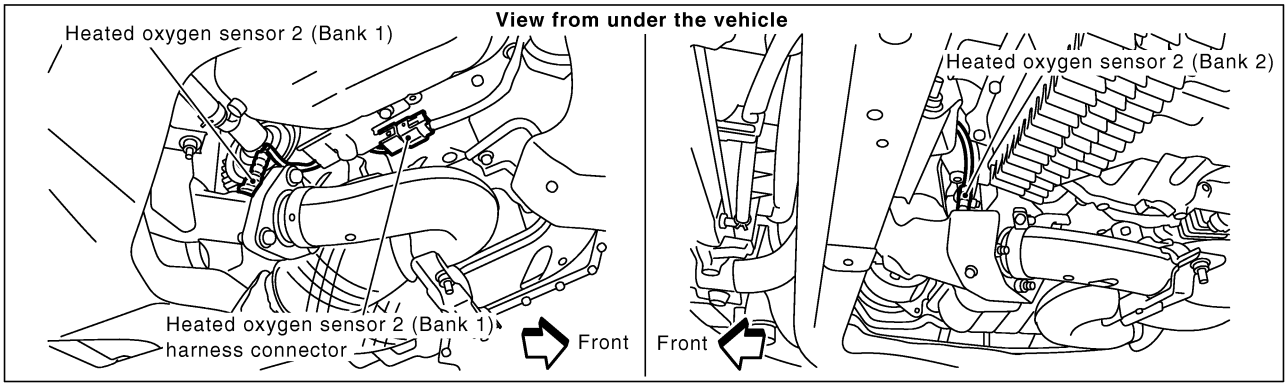
View from under the vehicle
Heated oxygen sensor 2 (Bank 1)
Heated oxygen sensor 2 (Bank 1) harness connector
Front
Heated oxygen sensor 2 (Bank 2)
Front

PBIB2290E

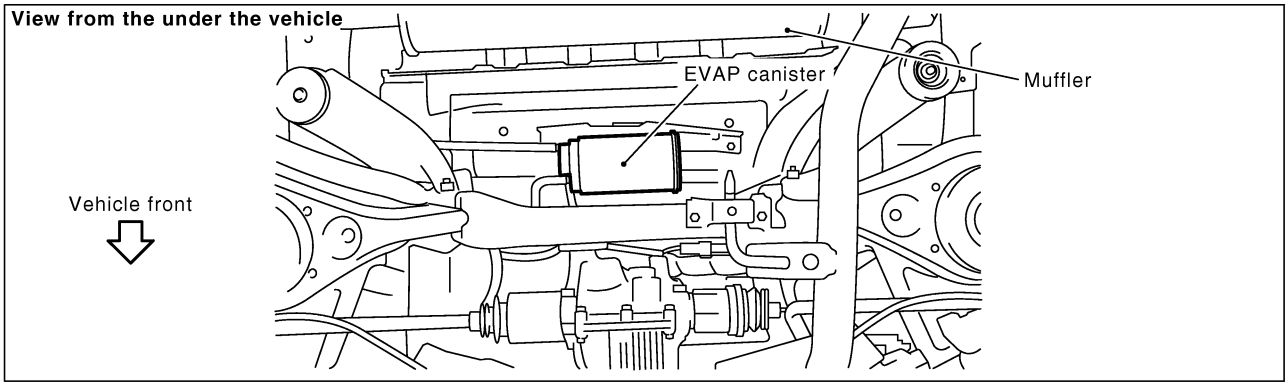
View from the under the vehicle
EVAP canister
Muffler
Vehicle front

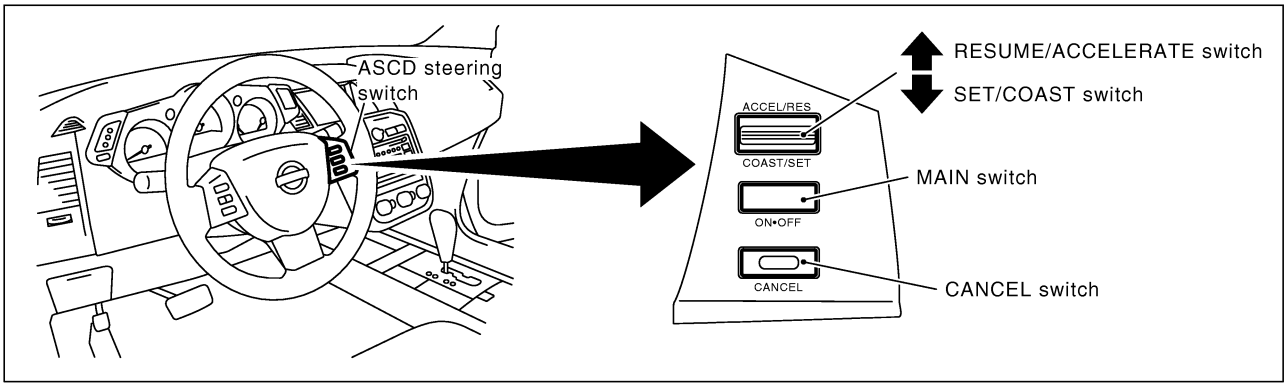
ASCD steering switch
RESUME/ACCELERATE switch
SET/COAST switch
ACCEL/RES
COAST/SET
MAIN switch
ON•OFF
CANCEL
CANCEL switch

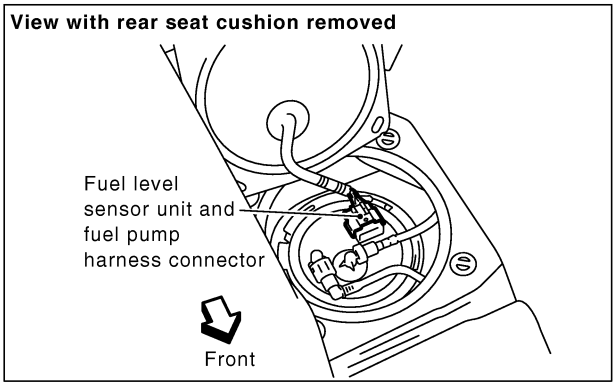
View with rear seat cushion removed
Fuel level sensor unit and fuel pump harness connector
Front

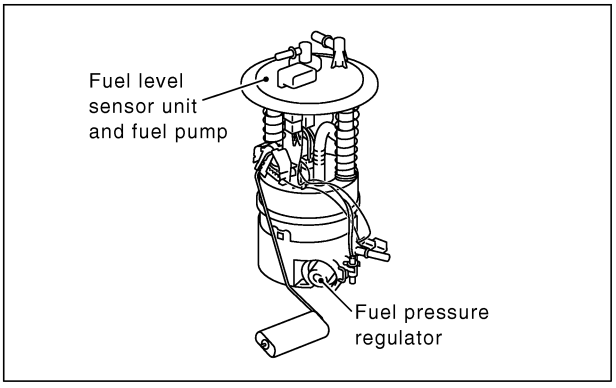
Fuel level sensor unit and fuel pump
Fuel pressure regulator

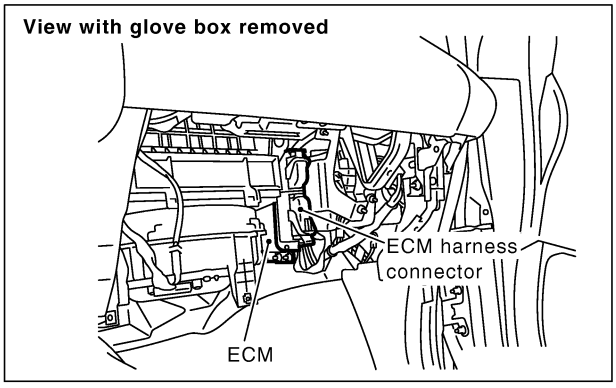
View with glove box removed
ECM harness connector
ECM

PBIB2671E

Vacuum Hose Drawing

ABS00GT4

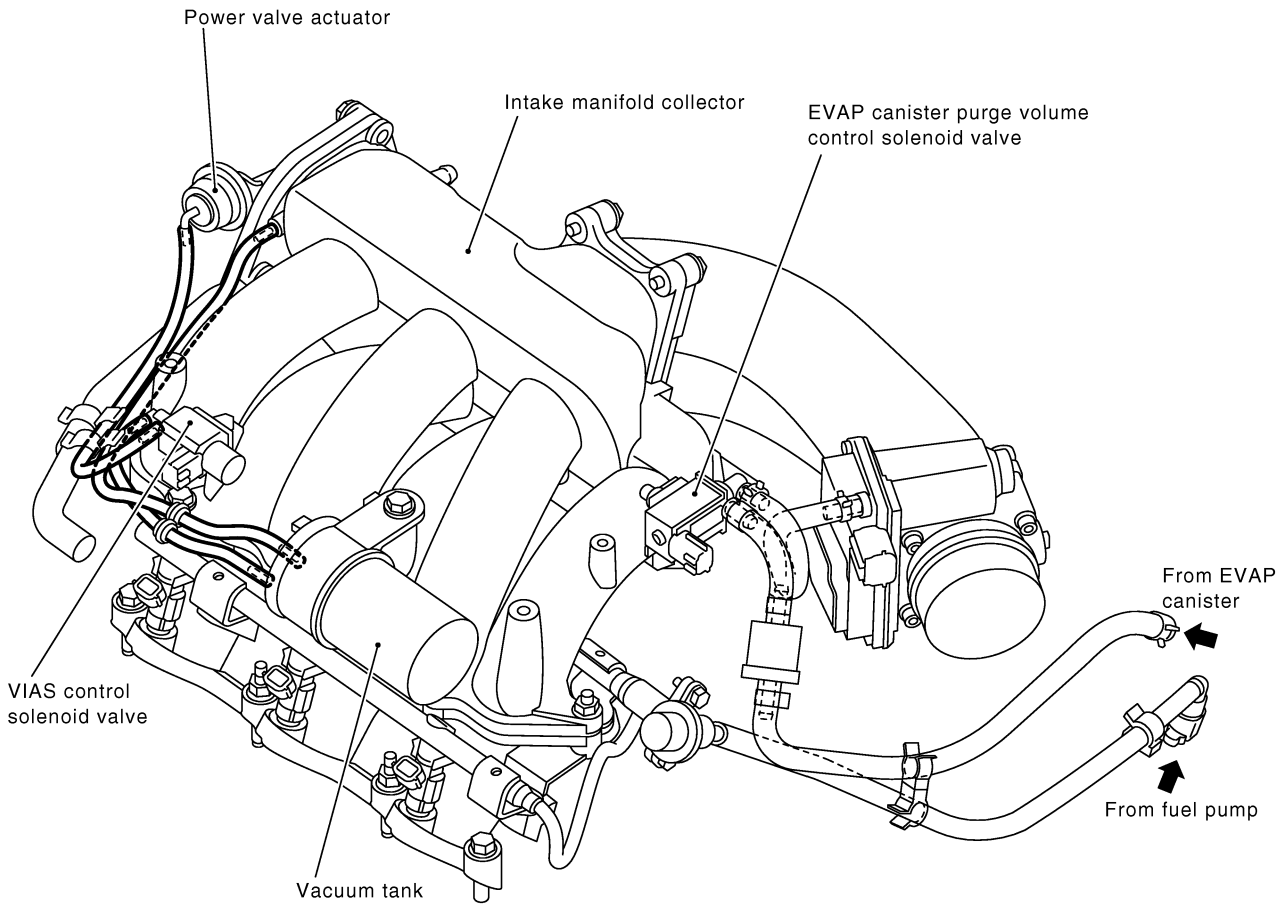

NOTE: Do not use soapy water or any type of solvent while installing vacuum hose or purge hoses.

PBIB1754E

Refer to EC-279, "System Diagram" for Vacuum Control System.

Circuit Diagram
LHD MODELS

ABS00GT5

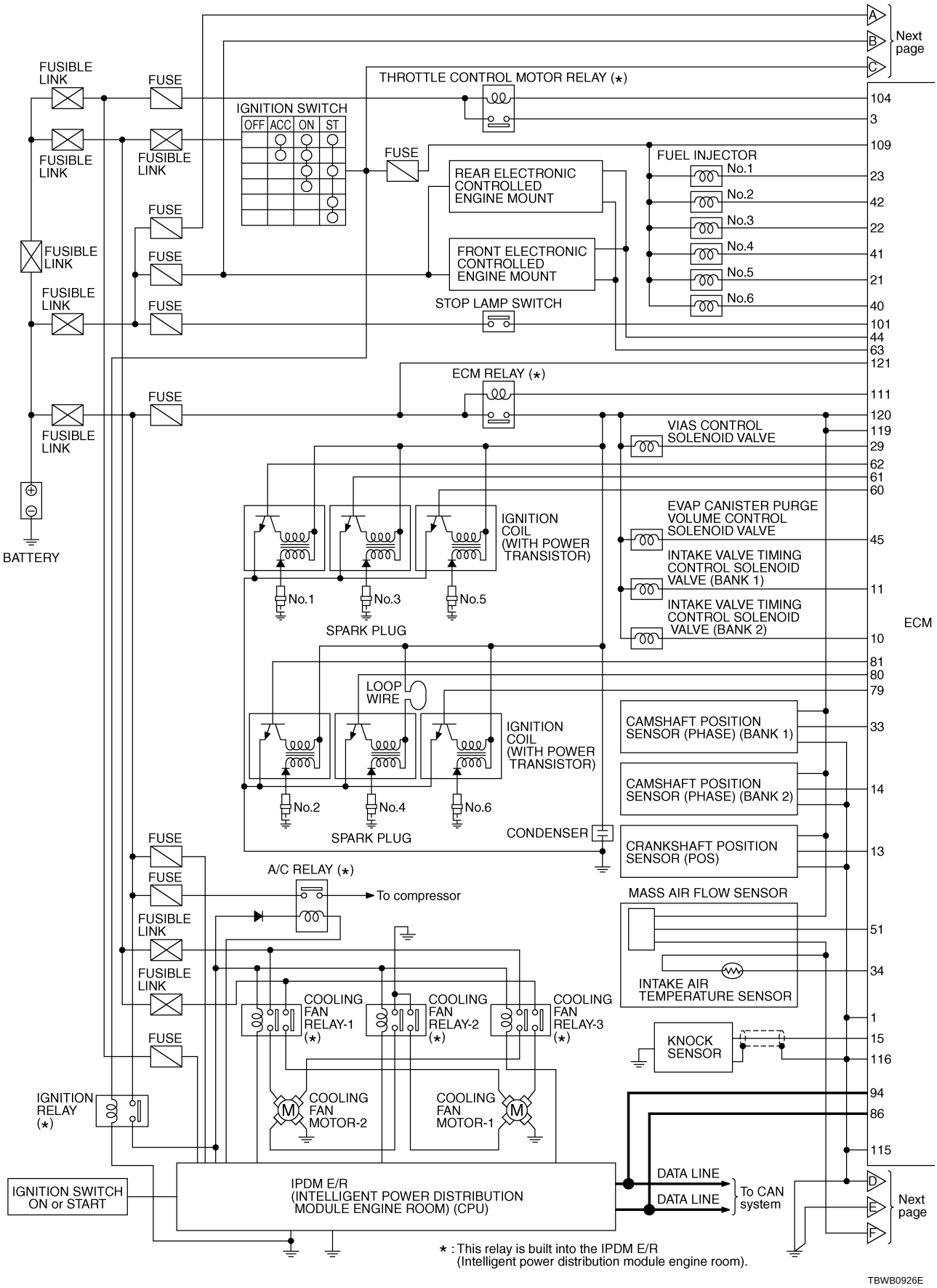

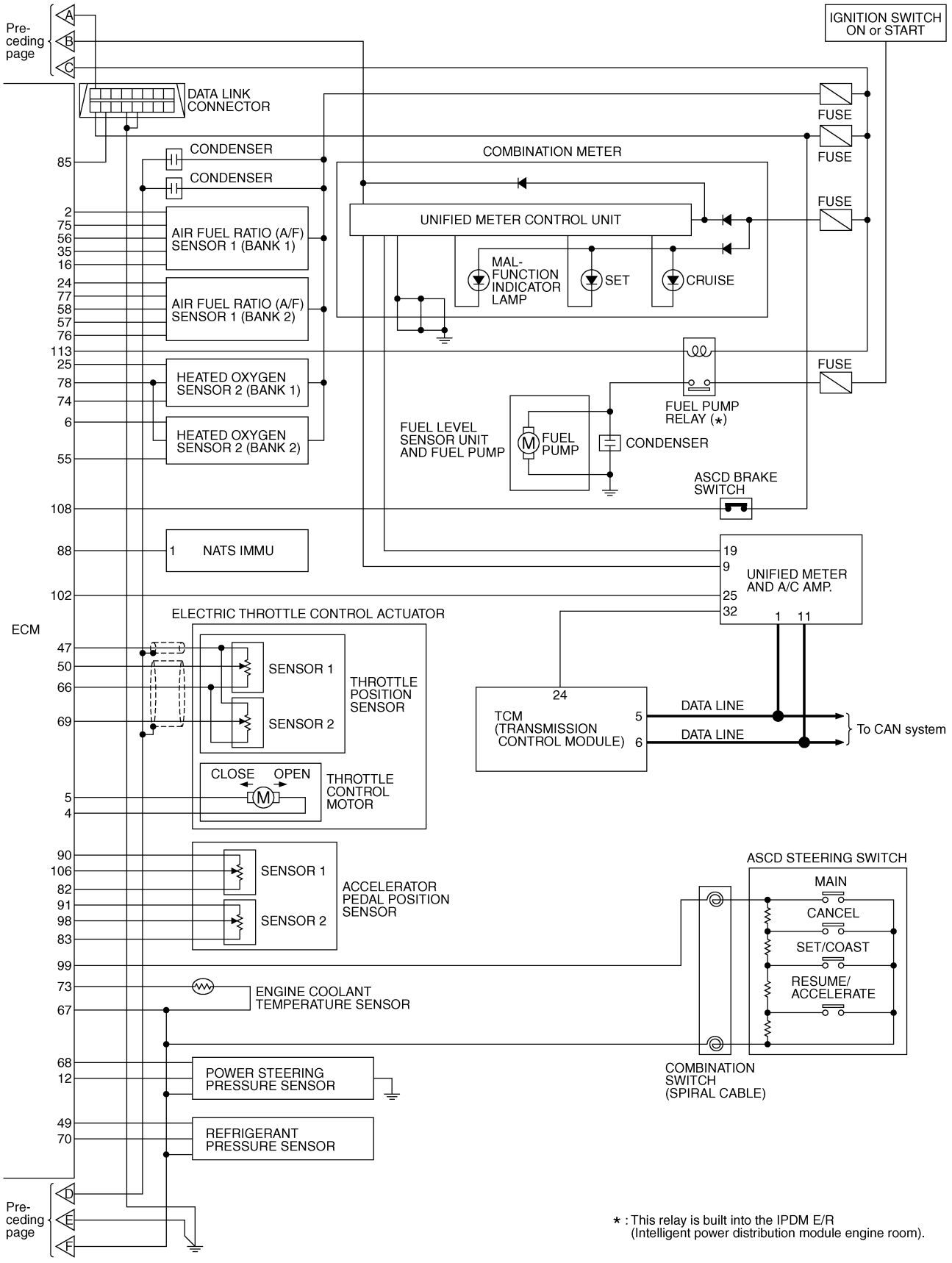
Pre-ceding page
A
B
C
IGNITION SWITCH ON or START
DATA LINK CONNECTOR
FUSE
FUSE
FUSE
FUSE
CONDENSER
CONDENSER
COMBINATION METER
UNIFIED METER CONTROL UNIT
MAL-FUNCTION INDICATOR LAMP
SET
CRUISE
AIR FUEL RATIO (A/F) SENSOR 1 (BANK 1)
AIR FUEL RATIO (A/F) SENSOR 1 (BANK 2)
HEATED OXYGEN SENSOR 2 (BANK 1)
HEATED OXYGEN SENSOR 2 (BANK 2)
FUEL PUMP RELAY (*)
FUEL LEVEL SENSOR UNIT AND FUEL PUMP
FUEL PUMP
CONDENSER
ASCD BRAKE SWITCH
NATS IMMU
UNIFIED METER AND A/C AMP.
ECM
ELECTRIC THROTTLE CONTROL ACTUATOR
SENSOR 1
SENSOR 2
THROTTLE POSITION SENSOR
CLOSE
OPEN
THROTTLE CONTROL MOTOR
TCM (TRANSMISSION CONTROL MODULE)
DATA LINE
DATA LINE
To CAN system
SENSOR 1
SENSOR 2
ACCELERATOR PEDAL POSITION SENSOR
ASCD STEERING SWITCH
MAIN
CANCEL
SET/COAST
RESUME/ ACCELERATE
ENGINE COOLANT TEMPERATURE SENSOR
POWER STEERING PRESSURE SENSOR
REFRIGERANT PRESSURE SENSOR
COMBINATION SWITCH (SPIRAL CABLE)
Pre-ceding page
D
E
F
* : This relay is built into the IPDM E/R (Intelligent power distribution module engine room).
TBWB1172E

ECM Harness Connector Terminal Layout

ABS00GT6

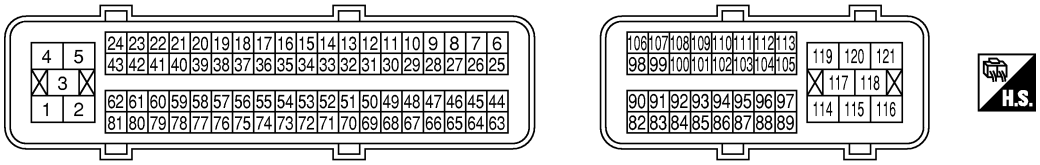

MBIB0045E

ECM Terminals and Reference Value

ABS00GT7

PREPARATION

1. ECM is located behind the glove box. For this inspection, remove glove box.
2. Remove ECM harness connector.

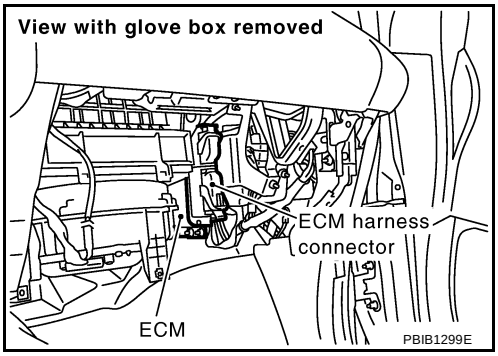

PBIB1299E

3. When disconnecting ECM harness connector, loosen it with levers as far as they will go as shown at right.
4. Connect a break-out box (SST) and Y-cable adapter (SST) between the ECM and ECM harness connector.
   - Use extreme care not to touch 2 pins at one time.
   - Data is for comparison and may not be exact.

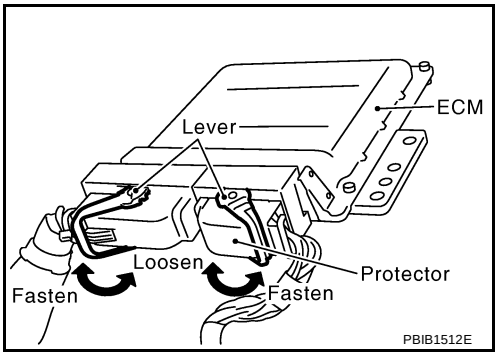

PBIB1512E

ECM INSPECTION TABLE

Specification data are reference values and are measured between each terminal and ground.
Pulse signal is measured by CONSULT-II.

CAUTION:

Do not use ECM ground terminals when measuring input/output voltage. Doing so may result in damage to the ECMs transistor. Use a ground other than ECM terminals, such as the ground.

TERMINAL NO.	WIRE COLOR	ITEM	CONDITION	DATA (DC Voltage)
1	B	ECM ground	**[Engine is running]** ● Idle speed	Body ground
2	G/B	A/F sensor 1 heater (bank 1)	**[Engine is running]** ● **Warm-up condition** ● Idle speed	Approximately 5V★ 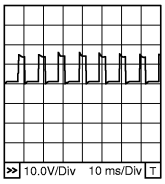 PBIB1584E

TER-MINAL NO.	WIRE COLOR	ITEM	CONDITION	DATA (DC Voltage)
3	R	Throttle control motor relay power supply	**[Ignition switch: ON]**	BATTERY VOLTAGE (11 - 14V)
4	G	Throttle control motor (Close)	**[Ignition switch: ON]** ● Engine stopped ● Shift lever: D ● Accelerator pedal: Fully released	0 - 14V★ 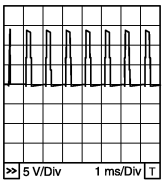 PBIB1104E
5	R	Throttle control motor (Open)	**[Ignition switch: ON]** ● Engine stopped ● Shift lever: D ● Accelerator pedal: Fully depressed	0 - 14V★ 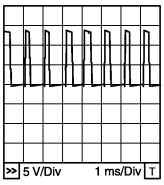 PBIB1105E
6	L/R	Heated oxygen sensor 2 heater (bank 2)	**[Engine is running]** ● Engine speed is below 3,600 rpm after the following conditions are met. – Engine: After warming up – Keeping the engine speed between 3,500 and 4,000 rpm for 1 minute and at idle for 1 minute under no load.	0 - 1.0V
			[Ignition switch: ON] ● Engine stopped **[Engine is running]** ● Engine speed is above 3,600 rpm.	BATTERY VOLTAGE (11 - 14V)
10	Y	Intake valve timing control solenoid valve (bank 2)	**[Engine is running]** ● **Warm-up condition** ● Idle speed	BATTERY VOLTAGE (11 - 14V)
			[Engine is running] ● **Warm-up condition** ● Engine speed is 2,000 rpm.	7 - 12V★ 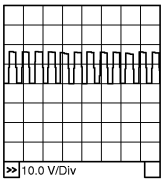 PBIB1790E
11	P	Intake valve timing control solenoid valve (bank 1)	**[Engine is running]** ● **Warm-up condition** ● Idle speed	BATTERY VOLTAGE (11 - 14V)
			[Engine is running] ● **Warm-up condition** ● Engine speed is 2,000 rpm.	7 - 12V★ 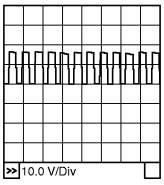 PBIB1790E

TER-MINAL NO.	WIRE COLOR	ITEM	CONDITION	DATA (DC Voltage)
12	W	Power steering pressure sensor	**[Engine is running]** ● Steering wheel is being turned.	0.5 - 4.5V
			[Engine is running] ● Steering wheel is not being turned.	0.4 - 0.8V
13	W	Crankshaft position sensor (POS)	**[Engine is running]** ● **Warm-up condition** ● Idle speed **NOTE:** The pulse cycle changes depending on rpm at idle.	Approximately 1.6V★ 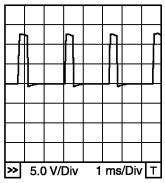 PBIB1041E
			[Engine is running] ● Engine speed is 2,000 rpm.	Approximately 1.4V★ 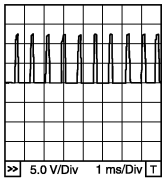 PBIB1042E
14	W	Camshaft position sensor (PHASE) (bank 2)	**[Engine is running]** ● **Warm-up condition** ● Idle speed **NOTE:** The pulse cycle changes depending on rpm at idle.	1.0 - 4.0V★ 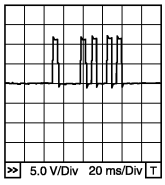 PBIB1039E
			[Engine is running] ● Engine speed is 2,000 rpm.	1.0 - 4.0V★ 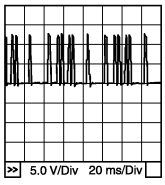 PBIB1040E
15	W	Knock sensor	**[Engine is running]** ● Idle speed	Approximately 2.5V
16	LG/B	A/F sensor 1 (Bank 1)	**[Engine is running]** ● **Warm-up condition** ● Idle speed	Approximately 3.1V
35	O/L			Approximately 2.6V
56	BR/Y			Approximately 2.3V
75	Y/R			Approximately 2.3V

TER-MINAL NO.	WIRE COLOR	ITEM	CONDITION	DATA (DC Voltage)
21 22 23	L/W R/Y R/B	Injector No. 5 Injector No. 3 Injector No. 1	**[Engine is running]** ● **Warm-up condition** ● Idle speed **NOTE:** The pulse cycle changes depending on rpm at idle.	BATTERY VOLTAGE (11 - 14V)★ 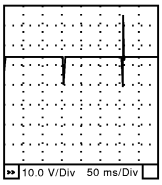 SEC984C
			[Engine is running] ● **Warm-up condition** ● Engine speed is 2,000 rpm.	BATTERY VOLTAGE (11 - 14V)★ 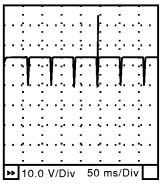 SEC985C
24	V	A/F sensor 1 heater (Bank 2)	**[Engine is running]** ● **Warm-up condition** ● Idle speed	Approximately 5V★ 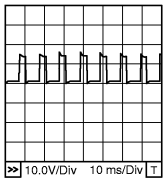 PBIB1584E
25	P/L	Heated oxygen sensor 2 heater (bank 1)	**[Engine is running]** ● Engine speed is below 3,600 rpm after the following conditions are met. – Engine: After warming up – Keeping the engine speed between 3,500 and 4,000 rpm for 1 minute and at idle for 1 minute under no load.	0 - 1.0V
			[Ignition switch: ON] ● Engine stopped **[Engine is running]** ● Engine speed is above 3,600 rpm.	BATTERY VOLTAGE (11 - 14V)
29	G/Y	VIAS control solenoid valve	**[Engine is running]** ● Idle speed	BATTERY VOLTAGE (11 - 14V)
			[Engine is running] ● Engine speed is between 1,800 and 3,600 rpm.	0 - 1.0V

TER-MINAL NO.	WIRE COLOR	ITEM	CONDITION	DATA (DC Voltage)
33	Y	Camshaft position sensor (PHASE) (bank 1)	**[Engine is running]** ● **Warm-up condition** ● Idle speed **NOTE:** The pulse cycle changes depending on rpm at idle.	1.0 - 4.0V★ 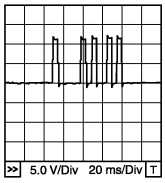 PBIB1039E
			[Engine is running] ● Engine speed is 2,000 rpm.	1.0 - 4.0V★ 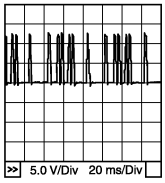 PBIB1040E
34	Y/G	Intake air temperature sensor	**[Engine is running]**	Approximately 0 - 4.8V Output voltage varies with intake air temperature.
40 41 42	R/G L/Y W/L	Injector No. 6 Injector No. 4 Injector No. 2	**[Engine is running]** ● **Warm-up condition** ● Idle speed **NOTE:** The pulse cycle changes depending on rpm at idle.	BATTERY VOLTAGE (11 - 14V)★ 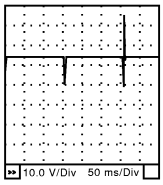 SEC984C
			[Engine is running] ● **Warm-up condition** ● Engine speed is 2,000 rpm.	BATTERY VOLTAGE (11 - 14V)★ 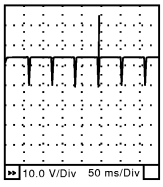 SEC985C
44	BR/W	Electronic controlled engine mount-1	**[Engine is running]** ● Engine speed is above 950 rpm.	BATTERY VOLTAGE (11 - 14V)
			[Engine is running] ● For 2 seconds after engine speed is 950 rpm or less.	0 - 1.0V
			[Engine is running] ● 2 seconds after engine speed is 950 rpm or less.	2.0 - 3.0V

TER-MINAL NO.	WIRE COLOR	ITEM	CONDITION	DATA (DC Voltage)
45	GR/L	EVAP canister purge volume control solenoid valve	**[Engine is running]** ● Idle speed	BATTERY VOLTAGE (11 - 14V)★ 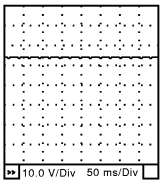 SEC990C
			[Engine is running] ● Engine speed is about 2,000 rpm (More than 100 seconds after starting engine).	BATTERY VOLTAGE (11 - 14V)★ 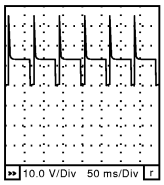 SEC991C
47	G	Sensor power supply (Throttle position sensor)	**[Ignition switch: ON]**	Approximately 5V
49	R/W	Sensor power supply (Refrigerant pressure sensor)	**[Ignition switch: ON]**	Approximately 5V
50	W	Throttle position sensor 1	**[Ignition switch: ON]** ● Engine stopped ● Shift lever: D ● Accelerator pedal: Fully released	More than 0.36V
			[Ignition switch: ON] ● Engine stopped ● Shift lever: D ● Accelerator pedal: Fully depressed	Less than 4.75V
51	G/W	Mass air flow sensor	**[Ignition switch: ON]**	Approximately 0.4V
			[Engine is running] ● **Warm-up condition** ● Idle speed	0.9 - 1.2V
			[Engine is running] ● **Warm-up condition** ● Engine is revving from idle to about 4,000 rpm	0.9 - 1.2 to Approximately 2.4V (Check for linear voltage rise in response to engine being increased to about 4,000 rpm)
55	W	Heated oxygen sensor 2 (bank 2)	**[Engine is running]** ● Revving engine from idle to 3,000 rpm quickly after the following conditions are met – Engine: After warming up – Keeping the engine speed between 3,500 and 4,000 rpm for 1 minute and at idle for 1 minute under no load	0 - Approximately 1.0V
57	P	A/F sensor 1 (Bank 2)	**[Engine is running]** ● **Warm-up condition** ● Idle speed	Approximately 2.6V
58	SB			Approximately 2.3V
76	G/Y			Approximately 3.1V
77	LG			Approximately 2.3V

TER-MINAL NO.	WIRE COLOR	ITEM	CONDITION	DATA (DC Voltage)
60 61 62	BR/R L/R Y/R	Ignition signal No. 5 Ignition signal No. 3 Ignition signal No. 1	**[Engine is running]** ● **Warm-up condition** ● Idle speed **NOTE:** The pulse cycle changes depending on rpm at idle.	0 - 0.3V★ 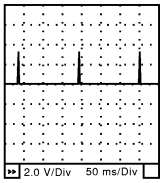 SEC986C
			[Engine is running] ● **Warm-up condition** ● Engine speed is 2,500 rpm.	0.1 - 0.6V★ 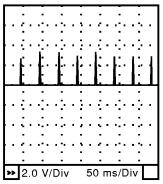 SEC987C
63	W/R	Electronic controlled engine mount-2	**[Engine is running]** ● Engine speed is below 950 rpm.	BATTERY VOLTAGE (11 - 14V)
			[Engine is running] ● For 2 seconds after engine speed is 950 rpm or more.	0 - 1.0V
			[Engine is running] ● 2 seconds after engine speed is 950 rpm or more.	2.0 - 3.0V
66	B	Sensor ground (Throttle position sensor)	**[Engine is running]** ● **Warm-up condition** ● Idle speed	Approximately 0V
67	B	Sensor ground	**[Engine is running]** ● **Warm-up condition** ● Idle speed	Approximately 0V
68	W/G	Sensor power supply (PSP sensor)	**[Ignition switch: ON]**	Approximately 5V
69	R	Throttle position sensor 2	**[Ignition switch: ON]** ● Engine stopped ● Shift lever: D ● Accelerator pedal: Fully released	Less than 4.75V
			[Ignition switch: ON] ● Engine stopped ● Shift lever: D ● Accelerator pedal: Fully depressed	More than 0.36V
70	W	Refrigerant pressure sensor	**[Engine is running]** ● **Warm-up condition** ● Both A/C switch and blower fan switch are ON (Compressor operates.)	1.0 - 4.0V
73	Y/B	Engine coolant temperature sensor	**[Engine is running]**	Approximately 0 - 4.8V Output voltage varies with engine coolant temperature.

TER-MINAL NO.	WIRE COLOR	ITEM	CONDITION	DATA (DC Voltage)
74	W	Heated oxygen sensor 2 (bank 1)	**[Engine is running]** ● Revving engine from idle to 3,000 rpm quickly after the following conditions are met – Engine: After warming up – Keeping the engine speed between 3,500 and 4,000 rpm for 1 minute and at idle for 1 minute under no load	0 - Approximately 1.0V
78	B	Sensor ground (Heated oxygen sensor 2)	**[Engine is running]** ● **Warm-up condition** ● Idle speed	Approximately 0V
79 80 81	GR/R GR G/R	Ignition signal No. 6 Ignition signal No. 4 Ignition signal No. 2	**[Engine is running]** ● **Warm-up condition** ● Idle speed **NOTE:** The pulse cycle changes depending on rpm at idle.	0 - 0.3V★ 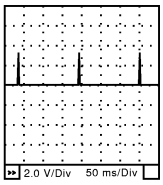 SEC986C
			[Engine is running] ● **Warm-up condition** ● Engine speed is 2,500 rpm.	0.1 - 0.6V★ 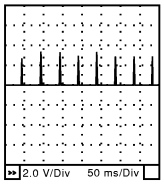 SEC987C
82	B	Sensor ground (APP sensor 1)	**[Engine is running]** ● **Warm-up condition** ● Idle speed	Approximately 0V
83	G	Sensor ground (APP sensor 2)	**[Engine is running]** ● **Warm-up condition** ● Idle speed	Approximately 0V
85	O	Data link connector	**[Ignition switch: ON]** ● CONSULT-II is disconnected.	Approximately 5V - Battery voltage (11 - 14V)
86	P	CAN communication line	**[Ignition switch: ON]**	Approximately 1.1 - 2.3V Output voltage varies with the communication status
90	R/W	Sensor power supply (APP sensor 1)	**[Ignition switch: ON]**	Approximately 5V
91	P	Sensor power supply (APP sensor 2)	**[Ignition switch: ON]**	Approximately 5V
94	L	CAN communication line	**[Ignition switch: ON]**	Approximately 2.6 - 3.2V Output voltage varies with the communication status.
98	W/R	Accelerator pedal position sensor 2	**[Ignition switch: ON]** ● Engine stopped ● Accelerator pedal: Fully released	0.25 - 0.5V
			[Ignition switch: ON] ● Engine stopped ● Accelerator pedal: Fully depressed	2.0 - 2.5V

TER-MINAL NO.	WIRE COLOR	ITEM	CONDITION	DATA (DC Voltage)
99	G/Y	ASCD steering switch	**[Ignition switch: ON]** ● ASCD steering switch: OFF	Approximately 4V
			[Ignition switch: ON] ● MAIN switch: Pressed	Approximately 0V
			[Ignition switch: ON] ● CANCEL switch: Pressed	Approximately 1V
			[Ignition switch: ON] ● RESUME/ACCELERATE switch: Pressed	Approximately 3V
			[Ignition switch: ON] ● SET/COAST switch: Pressed	Approximately 2V
101	R/G	Stop lamp switch	**[Ignition switch: OFF]** ● Brake pedal: Fully released	Approximately 0V
			[Ignition switch: OFF] ● Brake pedal: Slightly Depressed	BATTERY VOLTAGE (11 - 14V)
102	G/W	PNP switch	**[Ignition switch: ON]** ● Shift lever: P or N	Approximately 0V
			[Ignition switch: ON] ● Except above position	BATTERY VOLTAGE (11 - 14V)
104	P/L	Throttle control motor relay	**[Ignition switch: OFF]**	BATTERY VOLTAGE (11 - 14V)
			[Ignition switch: ON]	0 - 1.0V
106	W	Accelerator pedal position sensor 1	**[Ignition switch: ON]** ● Engine stopped ● Accelerator pedal: Fully released	0.5 - 1.0V
			[Ignition switch: ON] ● Engine stopped ● Accelerator pedal: Fully Depressed	4.2 - 4.8V
108	L/B	ASCD brake switch	**[Ignition switch: ON]** ● Brake pedal: Slightly Depressed	Approximately 0V
			[Ignition switch: ON] ● Brake pedal: Fully released	BATTERY VOLTAGE (11 - 14V)
109	R	Ignition switch	**[Ignition switch: OFF]**	0V
			[Ignition switch: ON]	BATTERY VOLTAGE (11 - 14V)
111	W/B	ECM relay (Self shut-off)	**[Engine is running]** **[Ignition switch: OFF]** ● For a few seconds after turning ignition switch OFF	0 - 1.5V
			[Ignition switch: OFF] ● More than a few seconds after turning ignition switch OFF	BATTERY VOLTAGE (11 - 14V)
113	B/P	Fuel pump relay	**[Ignition switch: ON]** ● For 1 second after turning ignition switch ON. **[Engine is running]**	0 - 1.5V
			[Ignition switch: ON] ● More than 1 second after turning ignition switch ON.	BATTERY VOLTAGE (11 - 14V)

TER-MINAL NO.	WIRE COLOR	ITEM	CONDITION	DATA (DC Voltage)
115 116	B B	ECM ground	**[Engine is running]** ● Idle speed	Body ground
119 120	R/B R/B	Power supply for ECM	**[Ignition switch: ON]**	BATTERY VOLTAGE (11 - 14V)
121	W/L	Power supply for ECM (Back-up)	**[Ignition switch: OFF]**	BATTERY VOLTAGE (11 - 14V)

★: Average voltage for pulse signal (Actual pulse signal can be confirmed by oscilloscope.)

CONSULT-II Reference Value in Data Monitor

ABS00GT9

Remarks:
- Specification data are reference values.
- Specification data are output/input values which are detected or supplied by the ECM at the connector.
  * Specification data may not be directly related to their components signals/values/operations.
  i.e. Adjust ignition timing with a timing light before monitoring IGN TIMING, because the monitor may show the specification data in spite of the ignition timing not being adjusted to the specification data. This IGN TIMING monitors the data calculated by the ECM according to the signals input from the camshaft position sensor and other ignition timing related sensors.

MONITOR ITEM	CONDITION		SPECIFICATION
ENG SPEED	● Run engine and compare CONSULT-II value with the tachometer indication.		Almost the same speed as the tachometer indication.
MAS A/F SE-B1	● See EC-328, "TROUBLE DIAGNOSIS - SPECIFICATION VALUE" .		
B/FUEL SCHDL	● See EC-328, "TROUBLE DIAGNOSIS - SPECIFICATION VALUE" .		
A/F ALPHA-B1 A/F ALPHA-B2	● See EC-328, "TROUBLE DIAGNOSIS - SPECIFICATION VALUE" .		
COOLAN TEMP/S	● Engine: After warming up		More than 70°C (158°F)
A/F SEN1 (B1) A/F SEN1 (B2)	● Engine: After warming up	Maintaining engine speed at 2,000 rpm	Fluctuates around 1.5 V
HO2S2 (B1) HO2S2 (B2)	● Revving engine from idle to 3,000 rpm quickly after the following conditions are met – Engine: After warning up – Keeping the engine speed between 3,500 and 4,000 rpm for 1 minute and at idle for 1 minute under no load		0 - 0.3V ←→ Approx. 0.6 - 1.0V
HO2S2 MNTR (B1) HO2S2 MNTR (B2)			LEAN ←→ RICH
VHCL SPEED SE	● Turn drive wheels and compare CONSULT-II value with the speedometer indication.		Almost the same speed as the speedometer indication
BATTERY VOLT	● Ignition switch: ON (Engine stopped)		11 - 14V
ACCEL SEN 1 ACCEL SEN 2*	● Ignition switch: ON (Engine stopped)	Accelerator pedal: Fully released	0.5 - 1.0V
		Accelerator pedal: Fully depressed	4.2 - 4.8V
THRTL SEN 1 THRTL SEN 2*	● Ignition switch: ON (Engine stopped) ● Shift lever: D	Accelerator pedal: Fully released	More than 0.36V
		Accelerator pedal: Fully depressed	Less than 4.75V
START SIGNAL	● Ignition switch: ON → START → ON		OFF → ON → OFF
CLSD THL POS	● Ignition switch: ON (Engine stopped)	Accelerator pedal: Fully released	ON
		Accelerator pedal: Slightly depressed	OFF
AIR COND SIG	● Engine: After warming up, idle the engine	Air conditioner switch: OFF	OFF
		Air conditioner switch: ON (Compressor operates.)	ON
P/N POSI SW	● Ignition switch: ON	Shift lever: P or N	ON
		Shift lever: Except above	OFF
PW/ST SIGNAL	● Engine: After warming up, idle the engine	Steering wheel: Not being turned	OFF
		Steering wheel: Being turned	ON
LOAD SIGNAL	● Ignition switch: ON	Rear window defogger switch is ON and/or lighting switch is in 2nd.	ON
		Rear window defogger switch is OFF and lighting switch is OFF.	OFF
IGNITION SW	● Ignition switch: ON → OFF → ON		ON → OFF → ON
HEATER FAN SW	● Engine: After warming up, idle the engine	Heater fan is operating	ON
		Heater fan is not operating	OFF
BRAKE SW	● Ignition switch: ON	Brake pedal: Fully released	OFF
		Brake pedal: Slightly depressed	ON

MONITOR ITEM	CONDITION		SPECIFICATION
INJ PULSE-B1 INJ PULSE-B2	● Engine: After warming up ● Shift lever: P or N ● Air conditioner switch: OFF ● No load	Idle	2.0 - 3.0 msec
		2,000 rpm	1.9 - 2.9 msec
IGN TIMING	● Engine: After warming up ● Shift lever: P or N ● Air conditioner switch: OFF ● No load	Idle	13° - 18° BTDC
		2,000 rpm	25° - 45° BTDC
PURG VOL C/V	● Engine: After warming up ● Shift lever: P or N ● Air conditioner switch: OFF ● No load	Idle	0%
		2,000 rpm	—
INT/V TIM (B1) INT/V TIM (B2)	● Engine: After warming up ● Shift lever: P or N ● Air conditioner switch: OFF ● No load	Idle	–5° - 5°CA
		2,000 rpm	Approx. 0° - 30°CA
INT/V SOL (B1) INT/V SOL (B2)	● Engine: After warming up ● Shift lever: P or N ● Air conditioner switch: OFF ● No load	Idle	0% - 2%
		2,000 rpm	Approx. 0% - 50%
VIAS S/V	● Engine: After warming up	1,800 - 3,600 rpm	ON
		Except above conditions	OFF
AIR COND RLY	● Engine: After warming up, idle the engine	Air conditioner switch: OFF	OFF
		Air conditioner switch: ON (Compressor operates)	ON
ENGINE MOUNT	● Engine: After warming up	Below 950 rpm	IDLE
		Above 950 rpm	TRVL
FUEL PUMP RLY	● For 1 second after turning ignition switch ON ● Engine running or cranking		ON
	● Except above conditions		OFF
THRTL RELAY	● Ignition switch: ON		ON
COOLING FAN	● Engine: After warming up, idle the engine ● Air conditioner switch: OFF	Engine coolant temperature is 94°C (201°F) or less	OFF
		Engine coolant temperature is between 95°C (203°F) and 99°C (210°F)	LOW
		Engine coolant temperature is 100°C (212°F) or more	HI
HO2S2 HTR (B1) HO2S2 HTR (B2)	● Engine speed is below 3,600 rpm after the following conditions are met. – Engine: After warming up – Keeping the engine speed between 3,500 and 4,000 rpm for 1 minute and at idle for 1 minute under no load		ON
	● Engine speed: Above 3,600 rpm		OFF
I/P PULLY SPD	● Vehicle speed: More than 20 km/h (12 MPH)		Almost the same speed as the tachometer indication
VEHICLE SPEED	● Turn drive wheels and compare CONSULT-II value with the speedometer indication.		Almost the same speed as the speedometer indication
A/F S1 HTR (B1) A/F S1 HTR (B2)	● Engine: After warming up, idle the engine		0 - 100%

MONITOR ITEM	CONDITION		SPECIFICATION
AC PRESS SEN	● Engine: Idle ● Both A/C switch and blower fan switch: ON (Compressor operates)		1.0 - 4.0V
VHCL SPEED SE	● Turn drive wheels and compare CONSULT-II value with the speedometer indication.		Almost the same speed as the speedometer indication
SET VHCL SPD	● Engine: Running	ASCD: Operating.	The preset vehicle speed is displayed.
MAIN SW	● Ignition switch: ON	MAIN switch: Pressed	ON
		MAIN switch: Released	OFF
CANCEL SW	● Ignition switch: ON	CANCEL switch: Pressed	ON
		CANCEL switch: Released	OFF
RESUME/ACC SW	● Ignition switch: ON	RESUME/ACCELERATE switch: Pressed	ON
		RESUME/ACCELERATE switch: Released	OFF
SET SW	● Ignition switch: ON	SET/COAST switch: Pressed	ON
		SET/COAST switch: Released	OFF
BRAKE SW1	● Ignition switch: ON	Brake pedal: Fully released	ON
		Brake pedal: Slightly depressed	OFF
BRAKE SW2	● Ignition switch: ON	Brake pedal: Fully released	OFF
		Brake pedal: Slightly depressed	ON
CRUISE LAMP	● Ignition switch: ON	MAIN switch: Pressed at the 1st time → at the 2nd time	ON → OFF
SET LAMP	● MAIN switch: ON ● When vehicle speed is between 40 km/h (25 MPH) and 200 km/h (124 MPH)	ASCD is operating	ON
		ASCD is not operating	OFF

*: Accelerator pedal position sensor 2 signal and throttle position sensor 2 signal are converted by ECM internally. Thus, they differ from ECM terminals voltage signal.

Major Sensor Reference Graph in Data Monitor Mode

ABS00GTA

The following are the major sensor reference graphs in “DATA MONITOR” mode.

CLSD THL POS, ACCEL SEN 1, THRTL SEN 1

Below is the data for “CLSD THL POS”, “ACCEL SEN 1” and “THRTL SEN 1” when depressing the accelerator pedal with the ignition switch ON and with selector lever in D position.
The signal of “ACCEL SEN 1” and “THRTL SEN 1” should rise gradually without any intermittent drop or rise after “CLSD THL POS” is changed from ON to OFF.

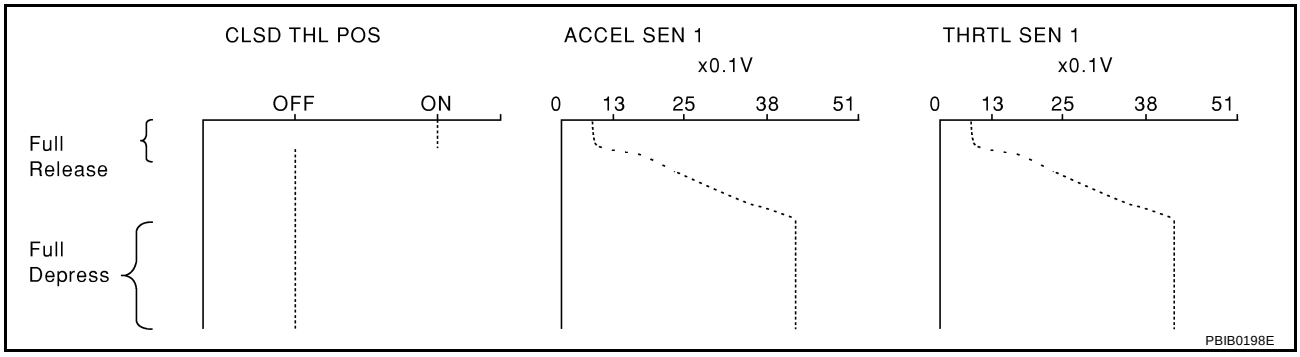

ENG SPEED, MAS A/F SE-B1, THRTL SEN 1, HO2S2 (B1), INJ PULSE-B1

Below is the data for “ENG SPEED”, “MAS A/F SE-B1”, “THRTL SEN 1”, “HO2S2 (B1)” and “INJ PULSE-B1” when revving engine quickly up to 4,800 rpm under no load after warming up engine sufficiently.
Each value is for reference, the exact value may vary.

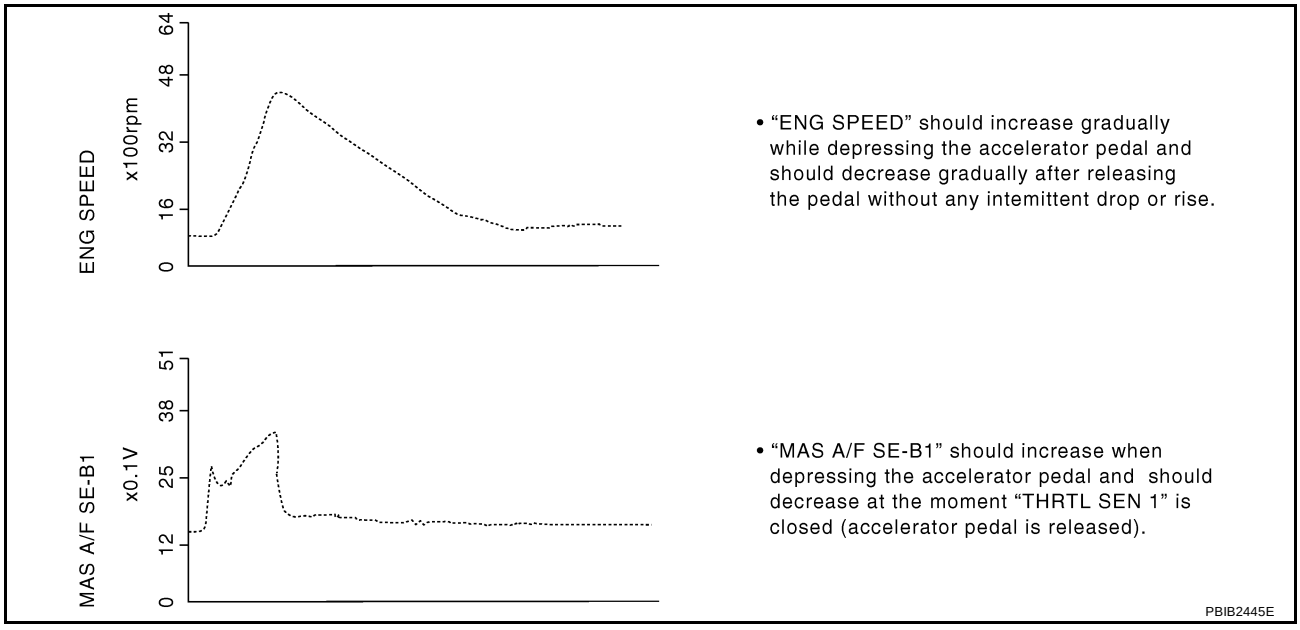

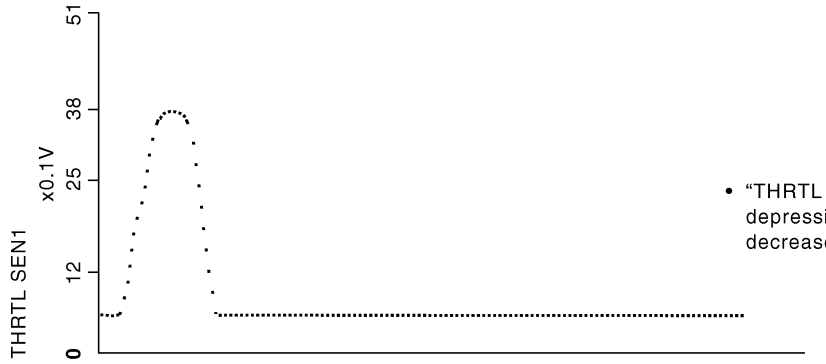

- "THRTL SEN1" should increase while depressing the accelerator pedal and should decrease while releasing it.

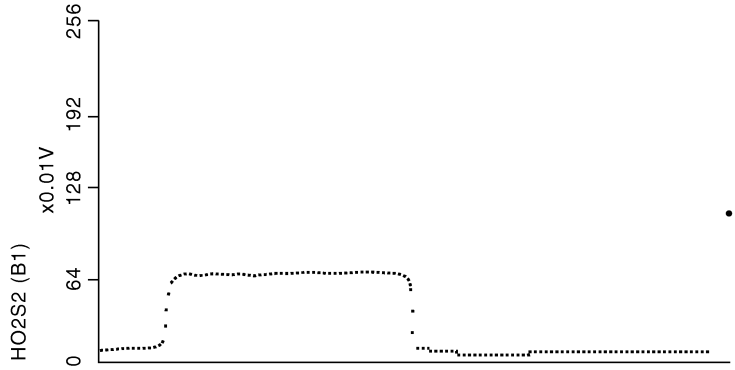

- "HO2S2 (B1)" may increase immediately after depressing the accelerator pedal and may decrease after releasing the pedal.

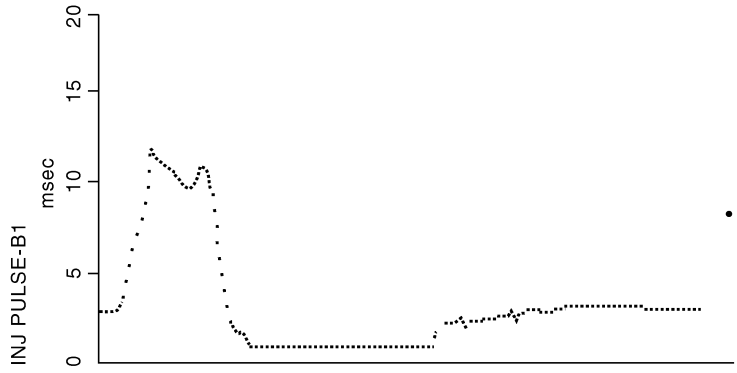

- "INJ PULSE-B1" should increase when depressing the accelerator pedal and should decrease when the pedal is released.

PBIB2099E

TROUBLE DIAGNOSIS - SPECIFICATION VALUE

PFP:00031

Description

ABS00GTB

The specification (SP) value indicates the tolerance of the value that is displayed in “DATA MONITOR (SPEC)” mode of CONSULT-II during normal operation of the Engine Control System. When the value in “DATA MONITOR (SPEC)” mode is within the SP value, the Engine Control System is confirmed OK. When the value in “DATA MONITOR (SPEC)” mode is NOT within the SP value, the Engine Control System may have one or more malfunctions.
The SP value is used to detect malfunctions that may affect the Engine Control System, but will not light the MIL.
The SP value will be displayed for the following three items:

- B/FUEL SCHDL (The fuel injection pulse width programmed into ECM prior to any learned on board correction)
- A/F ALPHA-B1/B2 (The mean value of air-fuel ratio feedback correction factor per cycle)
- MAS A/F SE-B1 (The signal voltage of the mass air flow sensor)

Testing Condition

ABS00GTC

- Vehicle driven distance: More than 5,000 km (3,107 miles)
- Barometric pressure: 98.3 - 104.3 kPa (0.983 - 1.043 bar, 1.003 - 1.064 kg/cm^2 , 14.25 - 15.12 psi)
- Atmospheric temperature: 20 - 30°C (68 - 86°F)
- Engine coolant temperature: 75 - 95°C (167 - 203°F)
- Transmission: Warmed-up*1
- Electrical load: Not applied*2
- Engine speed: Idle

*1: After the engine is warmed up to normal operating temperature, drive vehicle until “ATF TEMP SEN” (CVT fluid temperature sensor signal) indicates more than 60°C (140°F).
*2: Rear window defogger switch, air conditioner switch, lighting switch are OFF. Steering wheel is straight ahead.

Inspection Procedure

ABS00GTD

NOTE:
Perform “DATA MONITOR (SPEC)” mode in maximum scale display.

1. Perform EC-293, "Basic Inspection" .
2. Confirm that the testing conditions indicated above are met.
3. Select “B/FUEL SCHDL”, “A/F ALPHA-B1”, “A/F ALPHA-B2” and “MAS A/F SE-B1” in “DATA MONITOR (SPEC)” mode with CONSULT-II.
4. Make sure that monitor items are within the SP value.
5. If NG, go to EC-329, "Diagnostic Procedure" .

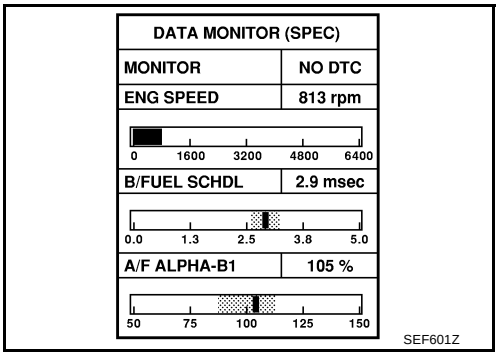

Diagnostic Procedure

ABS00GTE

OVERALL SEQUENCE

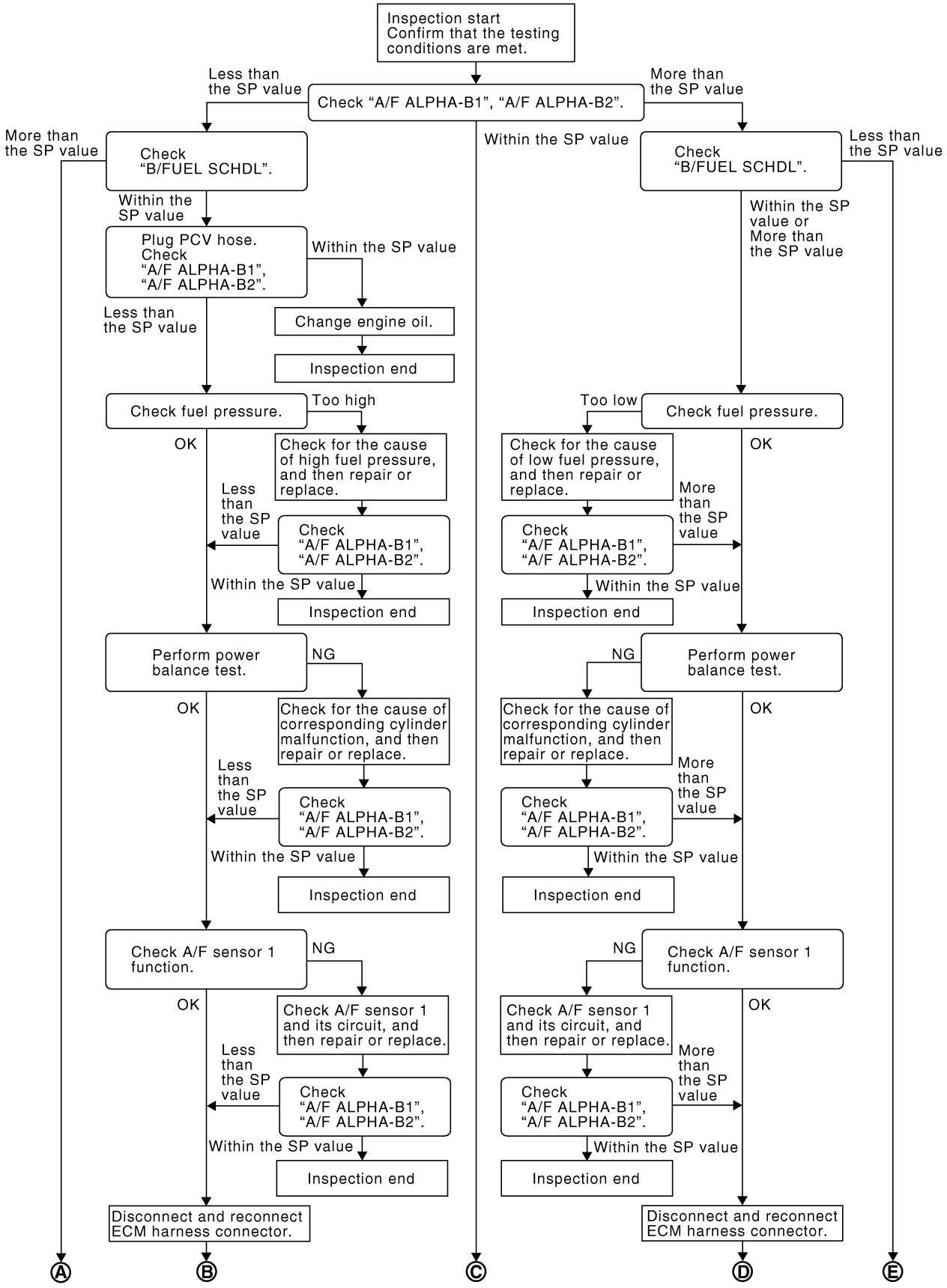

PBIB2268E

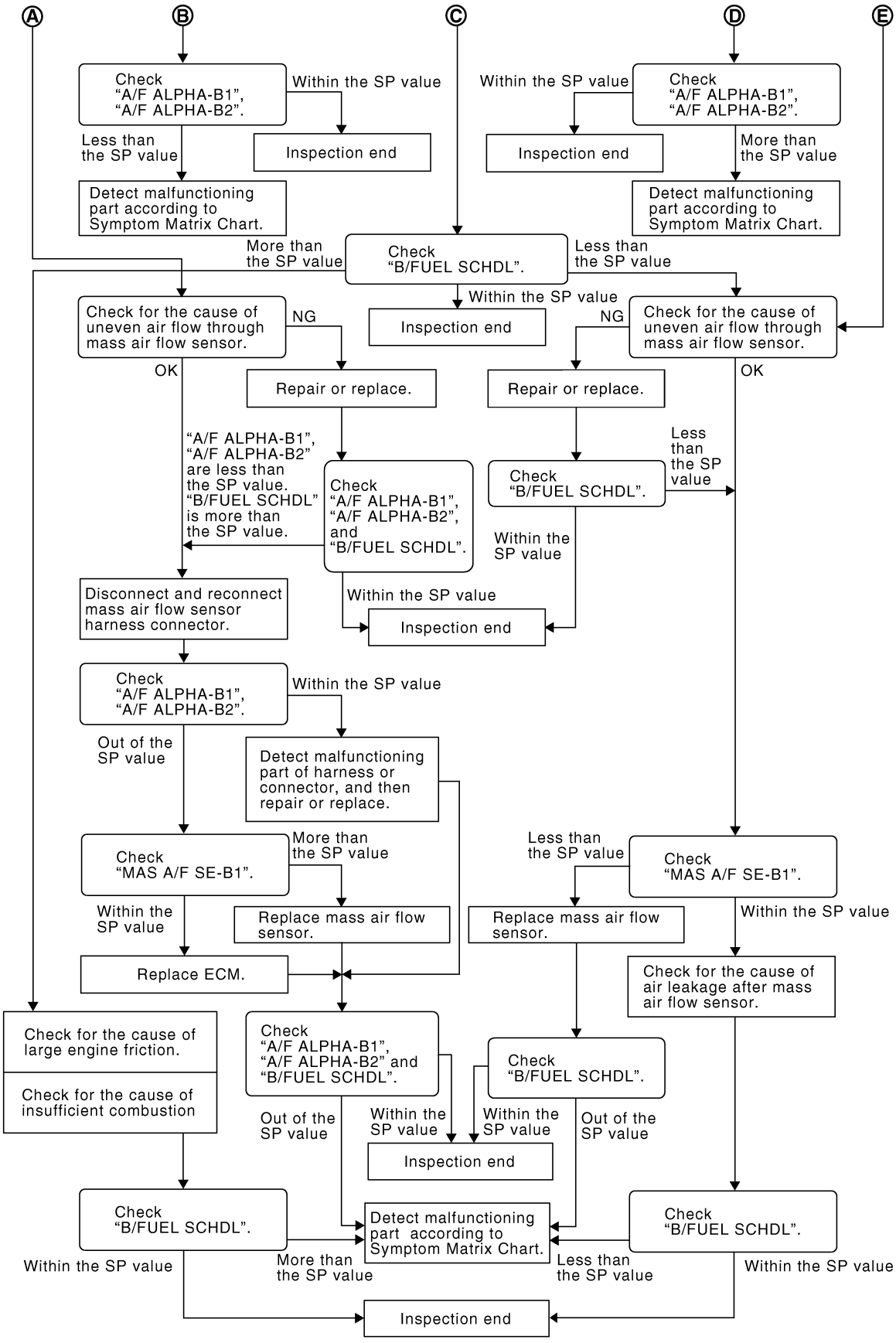
A
B
C
D
E
Check "A/F ALPHA-B1", "A/F ALPHA-B2".
Within the SP value
Inspection end
Less than the SP value
Detect malfunctioning part according to Symptom Matrix Chart.
Check "A/F ALPHA-B1", "A/F ALPHA-B2".
Within the SP value
Inspection end
More than the SP value
Detect malfunctioning part according to Symptom Matrix Chart.
More than the SP value
Check "B/FUEL SCHDL".
Less than the SP value
Within the SP value
Inspection end
Check for the cause of uneven air flow through mass air flow sensor.
NG
OK
Repair or replace.
Check for the cause of uneven air flow through mass air flow sensor.
NG
OK
Repair or replace.
"A/F ALPHA-B1", "A/F ALPHA-B2" are less than the SP value. "B/FUEL SCHDL" is more than the SP value.
Check "A/F ALPHA-B1", "A/F ALPHA-B2", and "B/FUEL SCHDL".
Check "B/FUEL SCHDL".
Less than the SP value
Within the SP value
Within the SP value
Inspection end
Disconnect and reconnect mass air flow sensor harness connector.
Check "A/F ALPHA-B1", "A/F ALPHA-B2".
Within the SP value
Out of the SP value
Detect malfunctioning part of harness or connector, and then repair or replace.
Check "MAS A/F SE-B1".
More than the SP value
Within the SP value
Replace mass air flow sensor.
Replace ECM.
Less than the SP value
Check "MAS A/F SE-B1".
Replace mass air flow sensor.
Within the SP value
Check for the cause of air leakage after mass air flow sensor.
Check for the cause of large engine friction.
Check for the cause of insufficient combustion
Check "A/F ALPHA-B1", "A/F ALPHA-B2" and "B/FUEL SCHDL".
Check "B/FUEL SCHDL".
Out of the SP value
Within the SP value
Within the SP value
Out of the SP value
Inspection end
Check "B/FUEL SCHDL".
Detect malfunctioning part according to Symptom Matrix Chart.
Check "B/FUEL SCHDL".
Within the SP value
More than the SP value
Less than the SP value
Within the SP value
Inspection end

PBIB3214E

DETAILED PROCEDURE

1. CHECK “A/F ALPHA-B1”, “A/F ALPHA-B2”

1. Start engine.
2. Confirm that the testing conditions are met. Refer to EC-328, "Testing Condition" .
3. Select “A/F ALPHA-B1”, “A/F ALPHA-B2” in “DATA MONITOR (SPEC)” mode, and make sure that the each indication is within the SP value.

   NOTE:
   Check “A/F ALPHA-B1”, “A/F ALPHA-B2” for approximately 1 minute because they may fluctuate. It is NG if the indication is out of the SP value even a little.

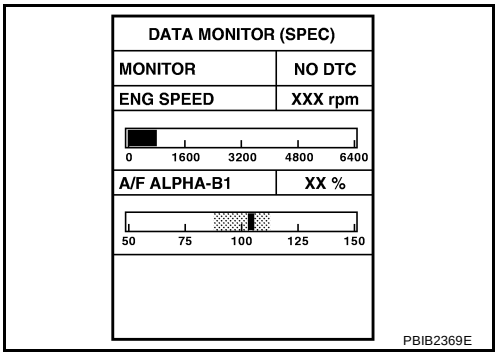

OK or NG

OK >> GO TO 17.
NG (Less than the SP value)>>GO TO 2.
NG (More than the SP value)>>GO TO 3.

2. CHECK “B/FUEL SCHDL”

Select “B/FUEL SCHDL” in “DATA MONITOR (SPEC)” mode, and make sure that the indication is within the SP value.

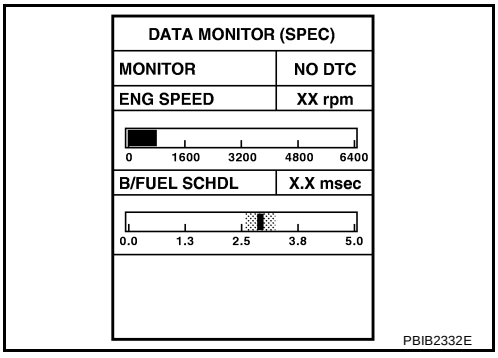

OK or NG

OK >> GO TO 4.
NG (More than the SP value)>>GO TO 19.

3. CHECK “B/FUEL SCHDL”

Select “B/FUEL SCHDL” in “DATA MONITOR (SPEC)” mode, and make sure that the indication is within the SP value.

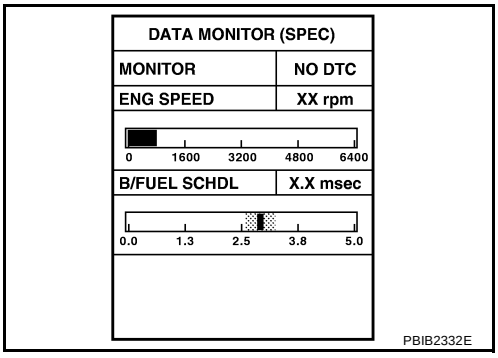

OK or NG

OK >> GO TO 6.
NG (More than the SP value)>>GO TO 6.
NG (Less than the SP value)>>GO TO 25.

4. CHECK “A/F ALPHA-B1”, “A/F ALPHA-B2”

1. Stop the engine.
2. Disconnect PCV hose, and then plug it.
3. Start engine.
4. Select “A/F ALPHA-B1”, “A/F ALPHA-B2” in “DATA MONITOR (SPEC)” mode, and make sure that the each indication is within the SP value.

OK or NG

OK >> GO TO 5.
NG >> GO TO 6.

5. CHANGE ENGINE OIL

1. Stop the engine.
2. Change engine oil.

   NOTE:
   This symptom may occur when a large amount of gasoline is mixed with engine oil because of driving conditions (such as when engine oil temperature does not rise enough since a journey distance is too short during winter). The symptom will not be detected after changing engine oil or changing driving condition.

>> **INSPECTION END**

6. CHECK FUEL PRESSURE

Check fuel pressure.

OK or NG

OK >> GO TO 9.
NG (Fuel pressure is too high)>>Replace fuel pressure regulator. GO TO 8.
NG (Fuel pressure is too low)>>GO TO 7.

7. DETECT MALFUNCTIONING PART

1. Check the following.

- Clogged and bent fuel hose and fuel tube
- Clogged fuel filter
- Fuel pump and its circuit (Refer to EC-519, "FUEL PUMP CIRCUIT" .)

2. If NG, repair or replace the malfunctioning part.
   If OK, replace fuel pressure regulator.

>> GO TO 8.

8. CHECK “A/F ALPHA-B1”, “A/F ALPHA-B2”

1. Start engine.
2. Select “A/F ALPHA-B1”, “A/F ALPHA-B2” in “DATA MONITOR (SPEC)” mode, and make sure that the each indication is within the SP value.

OK or NG

OK >> **INSPECTION END**
NG >> GO TO 9.

9. PERFORM POWER BALANCE TEST

1. Perform “POWER BALANCE” in “ACTIVE TEST” mode.
2. Make sure that the each cylinder produces a momentary engine speed drop.

OK or NG

OK >> GO TO 12.
NG >> GO TO 10.

ACTIVE TEST	
POWER BALANCE	
MONITOR	
ENG SPEED	XXX rpm
MAS A/F SE-B1	XXX V

PBIB0133E

10. DETECT MALFUNCTIONING PART

1. Check the following.
- Ignition coil and its circuit (Refer to EC-507, "IGNITION SIGNAL" .)
- Fuel injector and its circuit (Refer to EC-517, "INJECTOR CIRCUIT" .)
- Intake air leakage
- Low compression pressure
2. If NG, repair or replace the malfunctioning part.
   If OK, replace fuel injector. (It may be caused by leakage from fuel injector or clogging.)

>> GO TO 11.

11. CHECK “A/F ALPHA-B1”, “A/F ALPHA-B2”

1. Start engine.
2. Select “A/F ALPHA-B1”, “A/F ALPHA-B2” in “DATA MONITOR (SPEC)” mode, and make sure that the each indication is within the SP value.

OK or NG

OK >> **INSPECTION END**
NG >> GO TO 12.

12. CHECK A/F SENSOR 1 FUNCTION

Perform all DTC Confirmation Procedure related with A/F sensor 1.

- For DTC P1271, P1281, refer to EC-439, "DTC Confirmation Procedure" .
- For DTC P1272, P1282, refer to EC-445, "DTC Confirmation Procedure" .
- For DTC P1276, P1286, refer to EC-452, "Overall Function Check" .

OK or NG

OK >> GO TO 15.
NG >> GO TO 13.

13. CHECK A/F SENSOR 1 CIRCUIT

Perform Wiring Diagram according to corresponding DTC.

>> GO TO 14.

14. CHECK “A/F ALPHA-B1”, “A/F ALPHA-B2”

1. Start engine.
2. Select “A/F ALPHA-B1”, “A/F ALPHA-B2” in “DATA MONITOR (SPEC)” mode, and make sure that the each indication is within the SP value.

OK or NG

OK >> **INSPECTION END**
NG >> GO TO 15.

15. DISCONNECT AND RECONNECT ECM HARNESS CONNECTOR

1. Stop the engine.
2. Disconnect ECM harness connector. Check pin terminal and connector for damage, and then reconnect it.

>> GO TO 16.

16. CHECK “A/F ALPHA-B1”, “A/F ALPHA-B2”

1. Start engine.
2. Select “A/F ALPHA-B1”, “A/F ALPHA-B2” in “DATA MONITOR (SPEC)” mode, and make sure that the each indication is within the SP value.

OK or NG

OK >> **INSPECTION END**
NG >> Detect malfunctioning part according to EC-298, "Symptom Matrix Chart" .

17. CHECK “B/FUEL SCHDL”

Select “B/FUEL SCHDL” in “DATA MONITOR (SPEC)” mode, and make sure that the indication is within the SP value.

OK or NG

OK >> **INSPECTION END**
NG (More than the SP value)>>GO TO 18.
NG (Less than the SP value)>>GO TO 25.

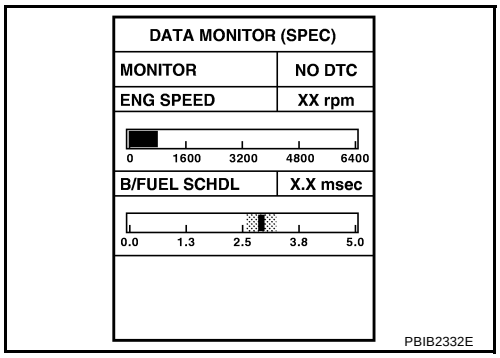

18. DETECT MALFUNCTIONING PART

1. Check for the cause of large engine friction. Refer to the following.
- Engine oil level is too high
- Engine oil viscosity
- Belt tension of power steering, alternator, A/C compressor, etc. is excessive
- Noise from engine
- Noise from transmission, etc.
2. Check for the cause of insufficient combustion. Refer to the following.
- Valve clearance malfunction
- Intake valve timing control function malfunction
- Camshaft sprocket installation malfunction, etc.

>> Repair or replace malfunctioning part, and then GO TO 30.

19. CHECK INTAKE SYSTEM

Check for the cause of uneven air flow through mass air flow sensor. Refer to the following.

- Crushed air ducts
- Malfunctioning seal of air cleaner element
- Uneven dirt of air cleaner element
- Improper specification of intake air system

OK or NG

OK >> GO TO 21.
NG >> Repair or replace malfunctioning part, and then GO TO 20.

20. CHECK “A/F ALPHA-B1”, “A/F ALPHA-B2”, AND “B/FUEL SCHDL”

Select “A/F ALPHA-B1”, “A/F ALPHA-B2”, and “B/FUEL SCHDL” in “DATA MONITOR (SPEC)” mode, and make sure that the each indication is within the SP value.

OK or NG

OK >> **INSPECTION END**

NG (“B/FUEL SCHDL” is more, “A/F ALPHA-B1”, “A/F ALPHA-B2” are less than the SP value)>>GO TO 21.

21. DISCONNECT AND RECONNECT MASS AIR FLOW SENSOR HARNESS CONNECTOR

1. Stop the engine.
2. Disconnect mass air flow sensor harness connector. Check pin terminal and connector for damage and then reconnect it again.

>> GO TO 22.

22. CHECK “A/F ALPHA-B1”, “A/F ALPHA-B2”

1. Start engine.
2. Select “A/F ALPHA-B1”, “A/F ALPHA-B2” in “DATA MONITOR (SPEC)” mode, and make sure that the each indication is within the SP value.

OK or NG

OK >> 1. Detect malfunctioning part of mass air flow sensor circuit and repair it. Refer to EC-357, "DTC P0102, P0103 MAF SENSOR" .

2. GO TO 29.

NG >> GO TO 23.

23. CHECK “MAS A/F SE-B1”

Select “MAS A/F SE-B1” in “DATA MONITOR (SPEC)” mode, and make sure that the indication is within the SP value.

OK or NG

OK >> GO TO 24.

NG (More than the SP value)>>Replace mass air flow sensor, and then GO TO 29.

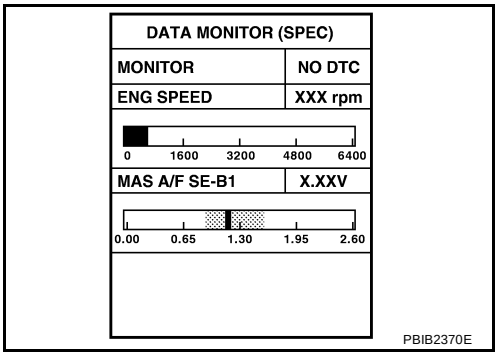

24. REPLACE ECM

1. Replace ECM.
2. Perform initialization of NATS system and registration of all NATS ignition key IDs. Refer to BL-116, "NATS(Nissan Anti-Theft System)" .
3. Perform Accelerator Pedal Released Position Learning.
4. Perform Throttle Valve Closed Position Learning.
5. Perform Idle Air Volume Learning.

>> GO TO 29.

25. CHECK INTAKE SYSTEM

Check for the cause of uneven air flow through mass air flow sensor. Refer to the following.

- Crushed air ducts
- Malfunctioning seal of air cleaner element
- Uneven dirt of air cleaner element
- Improper specification of intake air system

OK or NG

OK >> GO TO 27.
NG >> Repair or replace malfunctioning part, and then GO TO 26.

26. CHECK “B/FUEL SCHDL”

Select “B/FUEL SCHDL” in “DATA MONITOR (SPEC)” mode, and make sure that the indication is within the SP value.

OK or NG

OK >> **INSPECTION END**
NG (Less than the SP value)>>GO TO 27.

27. CHECK “MAS A/F SE-B1”

Select “MAS A/F SE-B1” in “DATA MONITOR (SPEC)” mode, and make sure that the indication is within the SP value.

OK or NG

OK >> GO TO 28.
NG (Less than the SP value)>>Replace mass air flow sensor, and then GO TO 30.

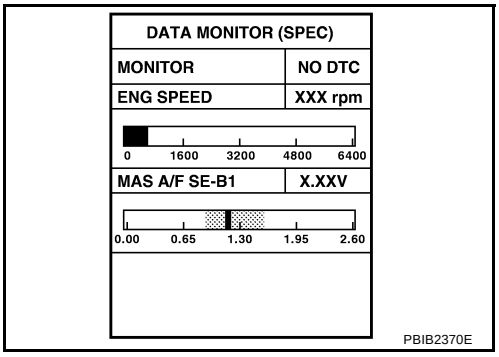

28. CHECK INTAKE SYSTEM

Check for the cause of air leak after the mass air flow sensor. Refer to the following.

- Disconnection, looseness, and cracks in air duct
- Looseness of oil filler cap
- Disconnection of oil level gauge
- Open stuck, breakage, hose disconnection, or cracks of PCV valve
- Disconnection or cracks of EVAP purge hose, open stuck of EVAP canister purge volume control solenoid valve
- Malfunctioning seal of rocker cover gasket
- Disconnection, looseness, or cracks of hoses, such as vacuum hose, connecting to intake air system parts
- Malfunctioning seal of intake air system, etc.

>> GO TO 30.

29. CHECK “A/F ALPHA-B1”, “A/F ALPHA-B2”, AND “B/FUEL SCHDL”

Select “A/F ALPHA-B1”, “A/F ALPHA-B2”, and “B/FUEL SCHDL” in “DATA MONITOR (SPEC)” mode, and make sure that the each indication is within the SP value.

OK or NG

OK >> **INSPECTION END**
NG >> Detect malfunctioning part according to EC-298, "Symptom Matrix Chart" .

30. CHECK “B/FUEL SCHDL”

Select “B/FUEL SCHDL” in “DATA MONITOR (SPEC)” mode, and then make sure that the indication is within the SP value.

OK or NG

OK >> **INSPECTION END**
NG >> Detect malfunctioning part according to EC-298, "Symptom Matrix Chart" .

TROUBLE DIAGNOSIS FOR INTERMITTENT INCIDENT

PFP:00006

Description

ABS00GTF

Intermittent incidents may occur. In many cases, the malfunction resolves itself (the part or circuit function returns to normal without intervention). It is important to realize that the symptoms described in the customer's complaint often do not recur on (1st trip) DTC visits. Realize also that the most frequent cause of intermittent incidents occurrences is poor electrical connections. Because of this, the conditions under which the incident occurred may not be clear. Therefore, circuit checks made as part of the standard diagnosis may not indicate the specific malfunctioning area.

Common Intermittent Incidents Report Situations

STEP in Work Flow	Situation
2	The CONSULT-II is used. The SELF-DIAG RESULTS screen shows time data other than [0] or [1t].
3 or 4	The symptom described by the customer does not recur.
5	(1st trip) DTC does not appear during the DTC Confirmation Procedure.
10	The Diagnosis for PXXXX does not indicate the malfunctioning area.

Diagnostic Procedure

ABS00GTG

1. INSPECTION START

Erase (1st trip) DTCs. Refer to GI-23, "How to Perform Efficient Diagnosis for an Electrical Incident" .

>> GO TO 2.

2. CHECK GROUND TERMINALS

Check ground terminals for corroding or loose connection.
Refer to EC-351, "Ground Inspection" .

OK or NG

OK >> GO TO 3.
NG >> Repair or replace.

3. SEARCH FOR ELECTRICAL INCIDENT

Perform GI-23, "How to Perform Efficient Diagnosis for an Electrical Incident" , “INCIDENT SIMULATION TESTS”.

OK or NG

OK >> **INSPECTION END**
NG >> Repair or replace.

POWER SUPPLY AND GROUND CIRCUIT

PFP:24110

Wiring Diagram
LHD MODELS

ABS00GTH

EC-MAIN-01

: DETECTABLE LINE FOR DTC
: NON-DETECTABLE LINE FOR DTC

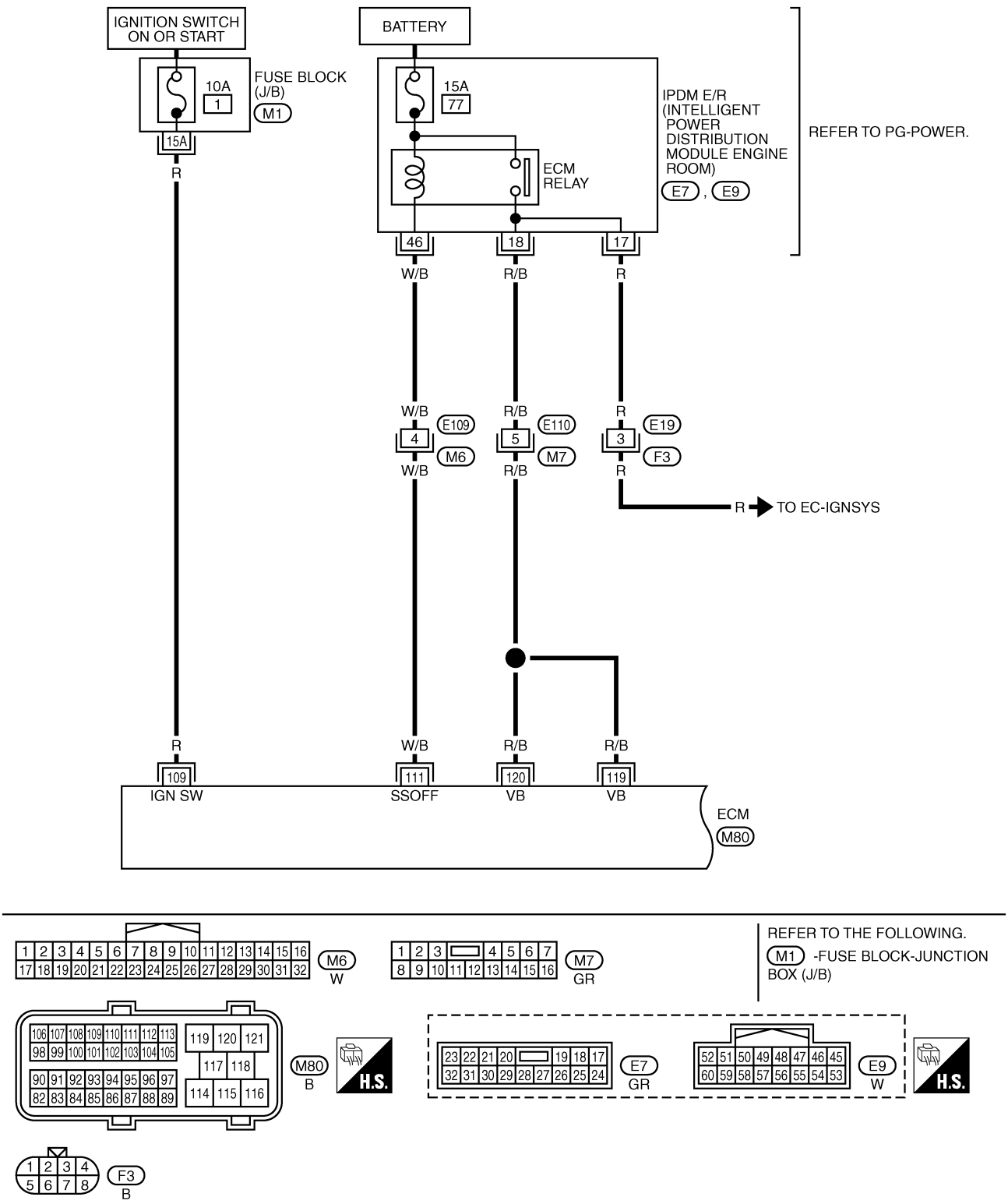

TBWB0483E

Specification data are reference values and are measured between each terminal and ground.

CAUTION:

Do not use ECM ground terminals when measuring input/output voltage. Doing so may result in damage to the ECM's transistor. Use a ground other than ECM terminals, such as the ground.

TERMINAL NO.	WIRE COLOR	ITEM	CONDITION	DATA (DC Voltage)
109	R	Ignition switch	**[Ignition switch: OFF]**	0V
			[Ignition switch: ON]	BATTERY VOLTAGE (11 - 14V)
111	W/B	ECM relay (Self shut-off)	**[Engine is running]** **[Ignition switch: OFF]** ● For a few seconds after turning ignition switch OFF	0 - 1.5V
			[Ignition switch: OFF] ● More than a few seconds after turning ignition switch OFF	BATTERY VOLTAGE (11 - 14V)
119 120	R/B R/B	Power supply for ECM	**[Ignition switch: ON]**	BATTERY VOLTAGE (11 - 14V)

EC-MAIN-02

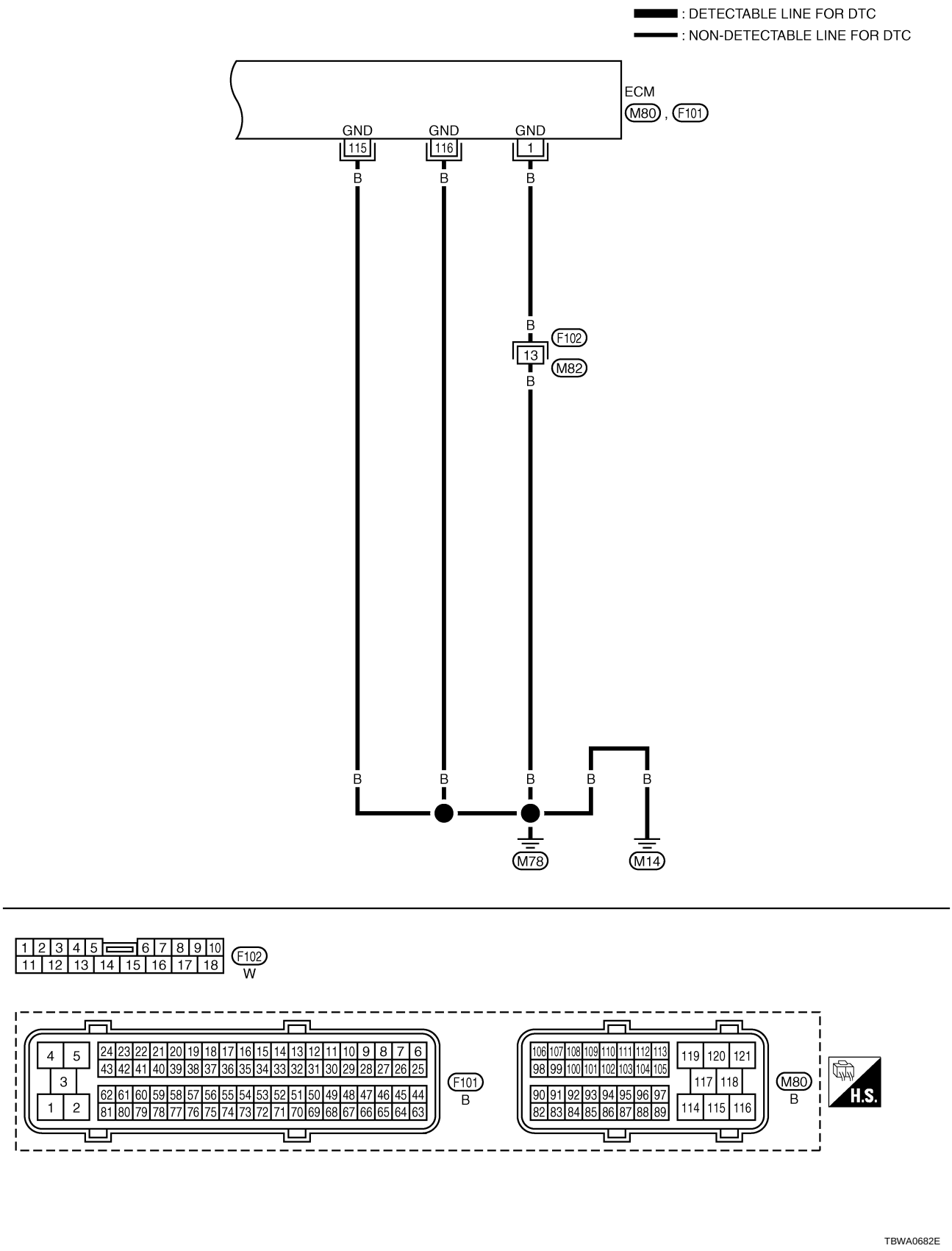
: DETECTABLE LINE FOR DTC
: NON-DETECTABLE LINE FOR DTC
ECM
M80 , F101
GND
115
GND
116
GND
1
B
F102
13
M82
M78
M14
F102
W
F101
B
M80
B
H.S.
TBWA0682E

Specification data are reference values and are measured between each terminal and ground.

CAUTION:

Do not use ECM ground terminals when measuring input/output voltage. Doing so may result in damage to the ECM's transistor. Use a ground other than ECM terminals, such as the ground.

TERMINAL NO.	WIRE COLOR	ITEM	CONDITION	DATA (DC Voltage)
1	B	ECM ground	**[Engine is running]** ● Idle speed	Body ground
115 116	B B	ECM ground	**[Engine is running]** ● Idle speed	Body ground

Diagnostic Procedure

ABS00GTI

1. INSPECTION START

Start engine.

Is engine running?

Yes or No

Yes >> GO TO 8.

No >> GO TO 2.

2. CHECK ECM POWER SUPPLY CIRCUIT-I

1. Turn ignition switch OFF and then ON.
2. Check voltage between ECM terminal 109 and ground with CONSULT-II or tester.

Voltage: Battery voltage

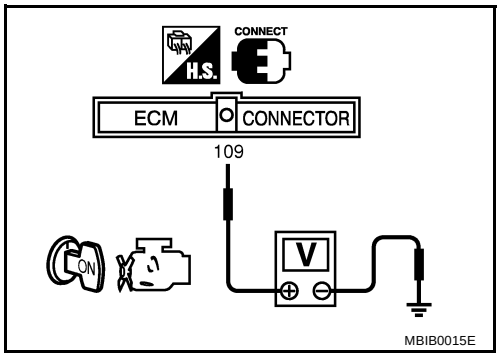

OK or NG

OK >> GO TO 4.

NG >> GO TO 3.

3. DETECT MALFUNCTIONING PART

Check the following.

- Fuse block (J/B) connector M1
- 10A fuse
- Harness for open or short between ECM and fuse

>> Repair open circuit or short to ground or short to power in harness or connectors.

4. CHECK GROUND CONNECTIONS

1. Turn ignition switch OFF.
2. Loosen and retighten two ground screws on the body.
   Refer to EC-351, "Ground Inspection" .

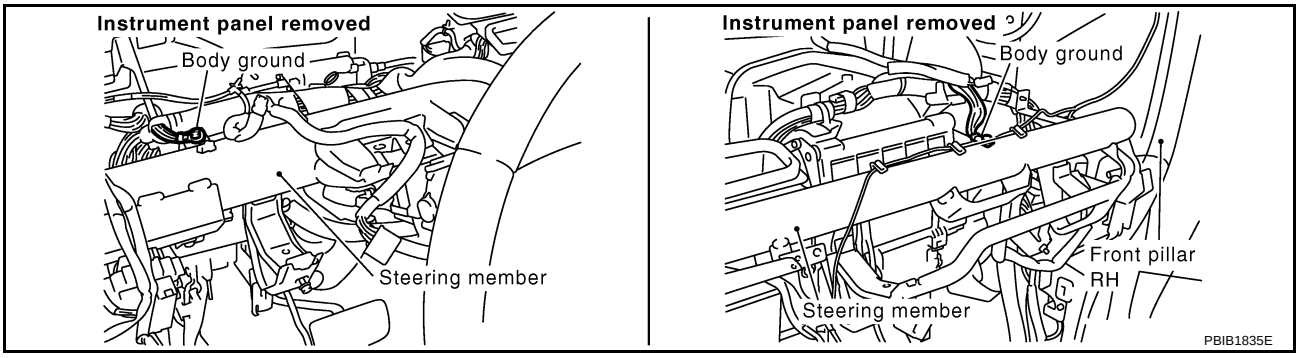

OK or NG

OK >> GO TO 5.
NG >> Repair or replace ground connections.

5. CHECK ECM GROUND CIRCUIT FOR OPEN AND SHORT-I

1. Disconnect ECM harness connector.
2. Check harness continuity between ECM terminals 1, 115, 116 and ground.
   Refer to Wiring Diagram.

   Continuity should exist.

3. Also check harness for short to power.

OK or NG

OK >> GO TO 7.
NG >> GO TO 6.

6. DETECT MALFUNCTIONING PART

Check the following.

- Harness connectors F102, M82
- Harness for open or short between ECM and ground

>> Repair open circuit or short to power in harness or connectors.

7. CHECK ECM POWER SUPPLY CIRCUIT-II

1. Reconnect ECM harness connector.
2. Turn ignition switch ON.
3. Check voltage between IPDM E/R terminal 17 and ground with CONSULT-II or tester.

   Voltage: Battery voltage

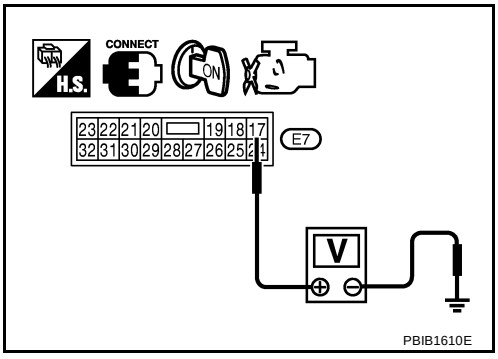

OK or NG

OK >> Go to EC-507, "IGNITION SIGNAL" .
NG >> GO TO 8.

8. CHECK ECM POWER SUPPLY CIRCUIT-III

1. Turn ignition switch ON and then OFF.
2. Check voltage between ECM terminals 119, 120 and ground with CONSULT-II or tester.

Voltage: After turning ignition switch OFF, battery voltage will exist for a few seconds, then drop approximately 0V.

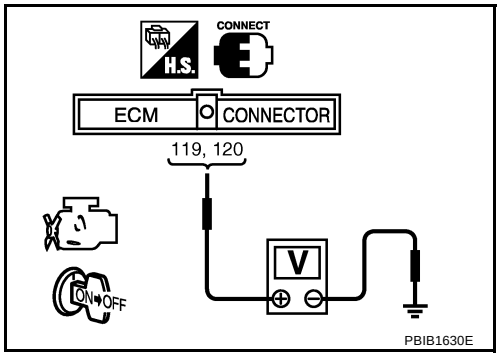

OK or NG

OK >> GO TO 15.
NG (Battery voltage does not exist.)>>GO TO 9.
NG (Battery voltage exists for more than a few seconds.)>>GO TO 12.

9. CHECK ECM POWER SUPPLY CIRCUIT-IV

1. Turn ignition switch OFF.
2. Check voltage between ECM terminal 111 and ground with CONSULT-II or tester.

Voltage: Battery voltage

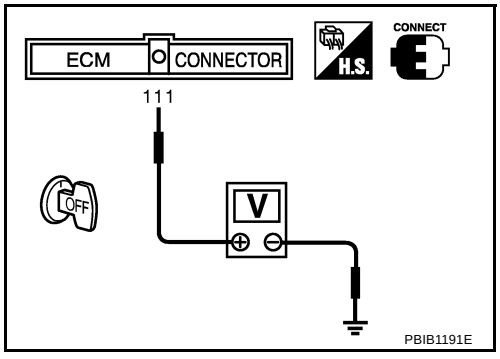

OK or NG

OK >> GO TO 10.
NG >> GO TO 12.

10. CHECK ECM POWER SUPPLY CIRCUIT-V

1. Disconnect ECM harness connector.
2. Disconnect IPDM E/R harness connector E7.
3. Check harness continuity between ECM terminals 119, 120 and IPDM E/R terminal 18. Refer to Wiring Diagram.

Continuity should exist.

4. Also check harness for short to ground and short to power.

OK or NG

OK >> GO TO 18.
NG >> GO TO 11.

11. DETECT MALFUNCTIONING PART

Check the following.

- Harness or connectors E110, M7
- Harness for open or short between ECM and IPDM E/R

>> Repair open circuit or short to ground or short to power in harness or connectors.

12. CHECK ECM POWER SUPPLY CIRCUIT-VII

1. Disconnect ECM harness connector.
2. Disconnect IPDM E/R harness connector E9.
3. Check harness continuity between ECM terminal 111 and IPDM E/R terminal 46.
   Refer to Wiring Diagram.

   Continuity should exist.

4. Also check harness for short to ground and short to power.

OK or NG

OK >> GO TO 14.
NG >> GO TO 13.

13. DETECT MALFUNCTIONING PART

Check the following.

- Harness or connectors E109, M6
- Harness for open or short between ECM and IPDM E/R

>> Repair open circuit or short to ground or short to power in harness or connectors.

14. CHECK 15A FUSE

1. Disconnect 15A fuse from IPDM E/R.
2. Check 15A fuse.

OK or NG

OK >> GO TO 18.
NG >> Replace 15A fuse.

15. CHECK GROUND CONNECTIONS

Loosen and retighten two ground screws on the body.
Refer to EC-351, "Ground Inspection" .

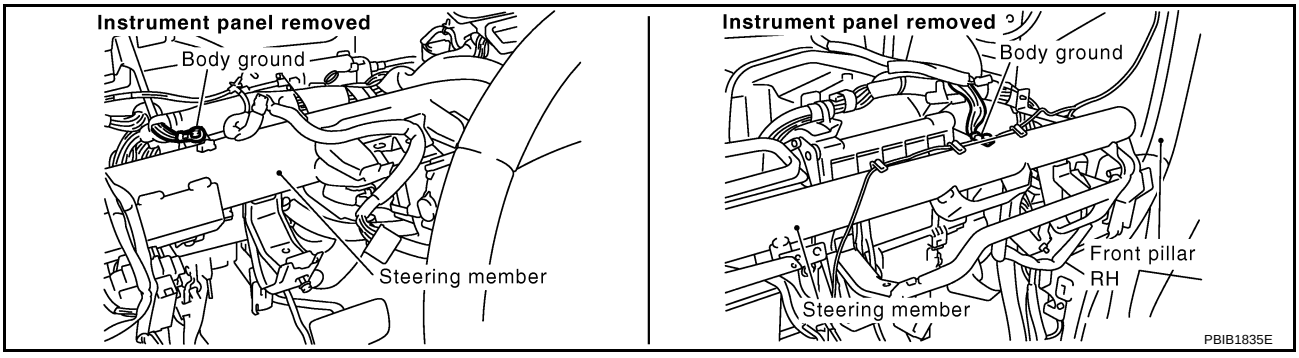

OK or NG

OK >> GO TO 16.
NG >> Repair or replace ground connections.

16. CHECK ECM GROUND CIRCUIT FOR OPEN AND SHORT-II

1. Disconnect ECM harness connector.
2. Check harness continuity between ECM terminals 1, 115, 116 and ground.
   Refer to Wiring Diagram.

   Continuity should exist.

3. Also check harness for short to power.

OK or NG

OK >> GO TO 18.
NG >> GO TO 17.

17. DETECT MALFUNCTIONING PART

Check the following.

- Harness connectors F102, M82
- Harness for open or short between ECM and ground

>> Repair open circuit or short to power in harness or connectors.

18. CHECK INTERMITTENT INCIDENT

Refer to EC-338, "TROUBLE DIAGNOSIS FOR INTERMITTENT INCIDENT" .

OK or NG

OK >> Replace IPDM E/R.
NG >> Repair open circuit or short to ground or short to power in harness or connectors.

Ground Inspection

ABS00GTJ

Ground connections are very important to the proper operation of electrical and electronic circuits. Ground connections are often exposed to moisture, dirt and other corrosive elements. The corrosion (rust) can become an unwanted resistance. This unwanted resistance can change the way a circuit works.
Electronically controlled circuits are very sensitive to proper grounding. A loose or corroded ground can drastically affect an electronically controlled circuit. A poor or corroded ground can easily affect the circuit. Even when the ground connection looks clean, there can be a thin film of rust on the surface.
When inspecting a ground connection follow these rules:

- Remove the ground bolt or screw.
- Inspect all mating surfaces for tarnish, dirt, rust, etc.
- Clean as required to assure good contact.
- Reinstall bolt or screw securely.
- Inspect for “add-on” accessories which may be interfering with the ground circuit.
- If several wires are crimped into one ground eyelet terminal, check for proper crimps. Make sure all of the wires are clean, securely fastened and providing a good ground path. If multiple wires are cased in one eyelet make sure no ground wires have excess wire insulation.

Ground Inspection

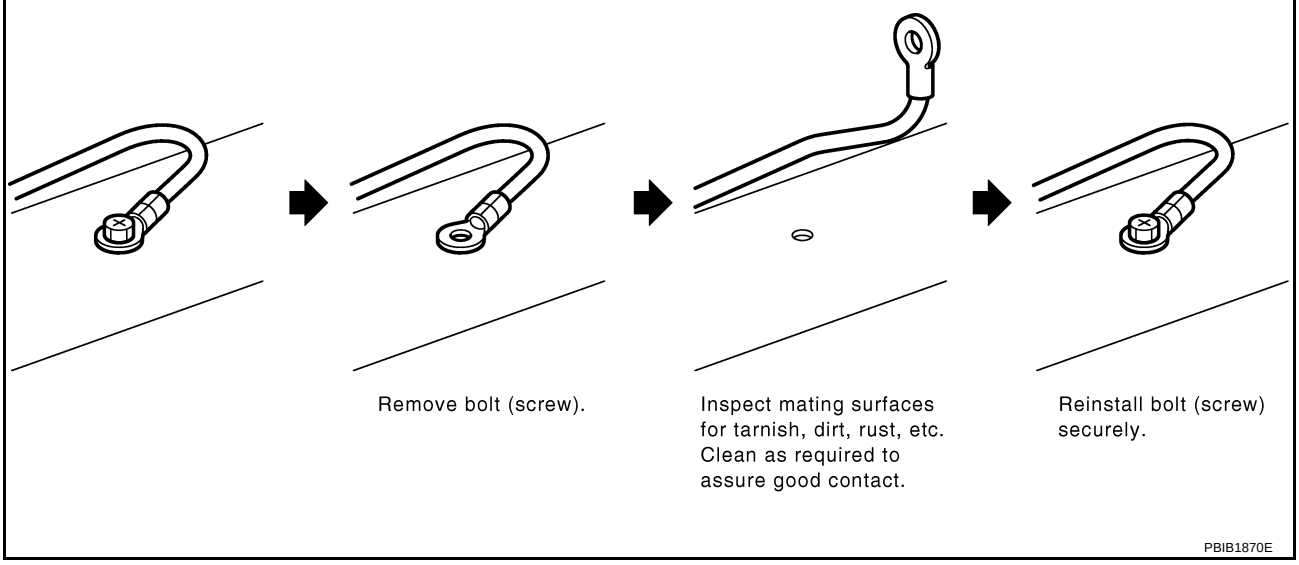

DTC U1000, U1001 CAN COMMUNICATION LINE

PFP:23710

Description

ABS00GTK

CAN (Controller Area Network) is a serial communication line for real time application. It is an on-vehicle multiplex communication line with high data communication speed and excellent error detection ability. Many electronic control units are equipped onto a vehicle, and each control unit shares information and links with other control units during operation (not independent). In CAN communication, control units are connected with 2 communication lines (CAN H line, CAN L line) allowing a high rate of information transmission with less wiring. Each control unit transmits/receives data but selectively reads required data only.

On Board Diagnosis Logic

ABS00GTL

The MIL will not light up for these diagnoses.

DTC No.	Trouble diagnosis name	DTC detecting condition	Possible cause
U1000 1000	CAN communication line	● ECM cannot communicate to other control units. ● ECM cannot communicate for more than the specified time.	● Harness or connectors (CAN communication line is open or shorted) (Refer to LAN-3, "Precautions When Using CONSULT-II")
U1001 1001			

DTC Confirmation Procedure

ABS00GTM

1. Turn ignition switch ON and wait at least 3 seconds.
2. Select “DATA MONITOR” mode with CONSULT-II.
3. If 1st trip DTC is detected, check possible cause items.

Wiring Diagram

ABS00GTN

EC-CAN-01

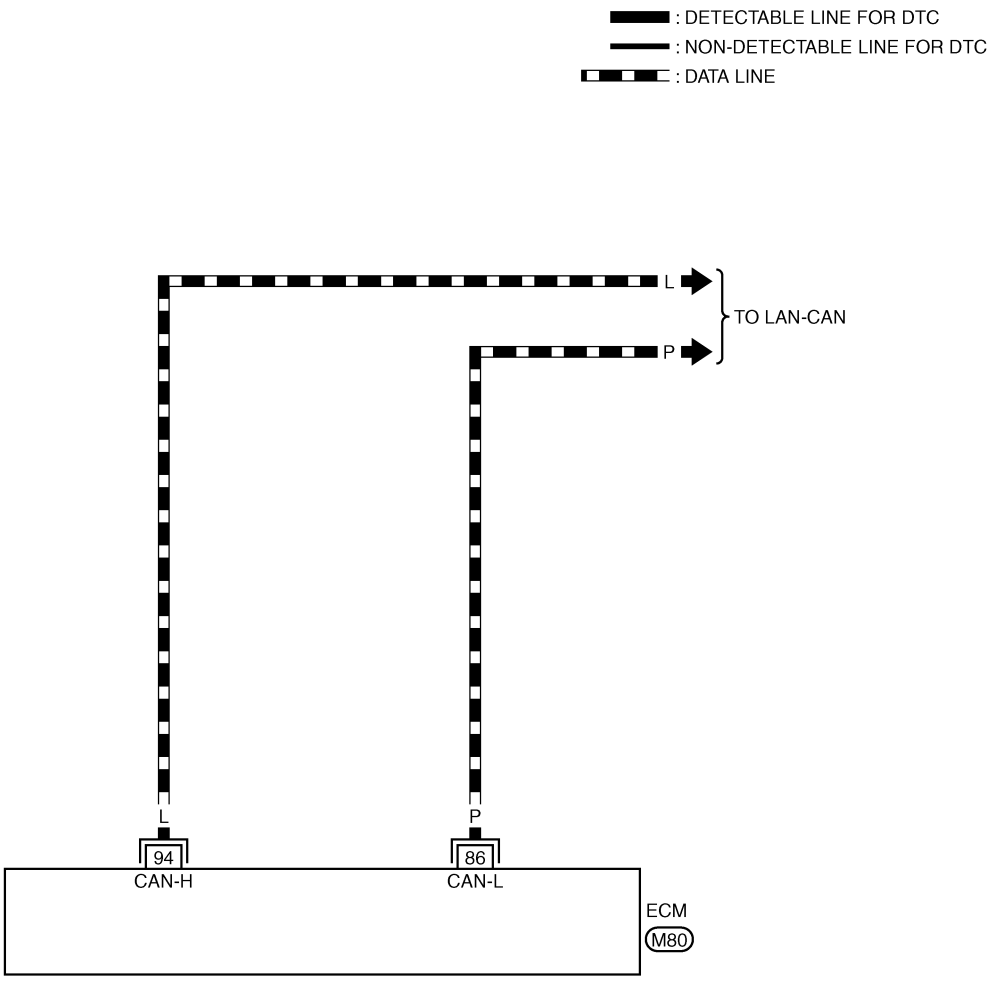

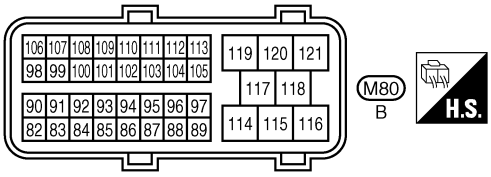

TBWB0486E

DTC P0011, P0021 IVT CONTROL

PFP:23796

Description

ABS00GTP

SYSTEM DESCRIPTION

Sensor	Input signal to ECM	ECM function	Actuator
Crankshaft position sensor (POS)	Engine speed and piston position	Intake valve timing control	Intake valve timing control solenoid valve
Camshaft position sensor (PHASE)			
Engine coolant temperature sensor	Engine coolant temperature		
Wheel sensor*	Vehicle speed		

*: This signal is sent to the ECM through CAN Communication line

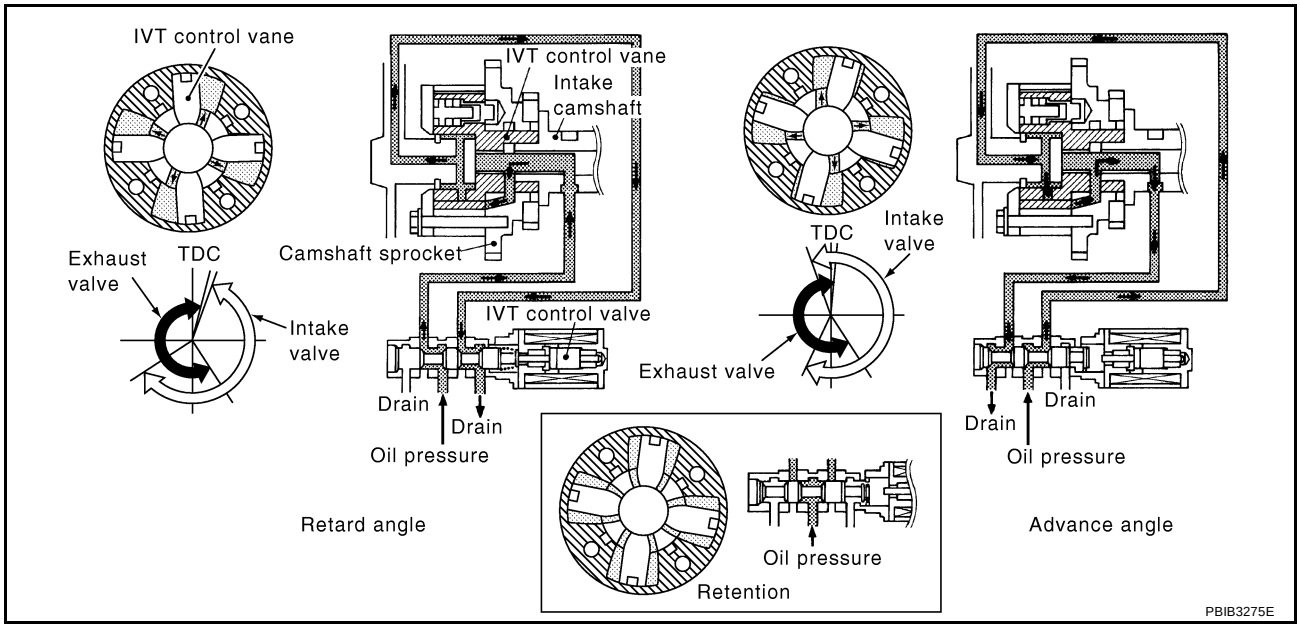

This mechanism hydraulically controls cam phases continuously with the fixed operating angle of the intake valve.

The ECM receives signals such as crankshaft position, camshaft position, engine speed, and engine coolant temperature. Then, the ECM sends ON/OFF pulse duty signals to the intake valve timing control solenoid valve depending on driving status. This makes it possible to control the shut/open timing of the intake valve to increase engine torque in low/mid speed range and output in high-speed range.

CONSULT-II Reference Value in Data Monitor Mode

ABS00GTQ

Specification data are reference values.

MONITOR ITEM	CONDITION		SPECIFICATION
INT/V TIM (B1) INT/V TIM (B2)	● Engine: After warming up ● Shift lever: P or N ● Air conditioner switch: OFF ● No-load	Idle	–5° - 5°CA
		2,000 rpm	Approx. 0° - 30°CA
INT/V SOL (B1) INT/V SOL (B2)	● Engine: After warming up ● Shift lever: P or N ● Air conditioner switch: OFF ● No-load	Idle	0% - 2%
		2,000 rpm	Approx. 0% - 50%

On Board Diagnosis Logic

ABS00GTR

The MIL will not lights up for these diagnoses.

DTC No.	Trouble diagnosis name	Detecting condition	Possible cause
P0011 0011 (Bank 1)	Intake valve timing control performance	There is a gap between angle of target and phase-control angle degree.	● Crankshaft position sensor (POS) ● Camshaft position sensor (PHASE) ● Intake valve control solenoid valve ● Accumulation of debris to the signal pick-up portion of the camshaft ● Timing chain installation ● Foreign matter caught in the oil groove for intake valve timing control
P0021 0021 (Bank 2)			

FAIL-SAFE MODE

When the malfunction is detected, the ECM enters fail-safe mode.

Detected items	Engine operating condition in fail-safe mode
Intake valve timing control	The signal is not energized to the solenoid valve and the valve control does not function.

DTC Confirmation Procedure

ABS00GTS

CAUTION:
Always drive at a safe speed.

NOTE:

- **If DTC P0011 or P0021 is displayed with DTC P1111 or P1136, first perform trouble diagnosis for DTC P1111 or P1136. Refer to EC-405 .**
- If DTC Confirmation Procedure has been previously conducted, always turn ignition switch OFF and wait at least 10 seconds before conducting the next test.

TESTING CONDITION:
Before performing the following procedure, confirm that battery voltage is between 10V and 16V at idle.

WITH CONSULT-II

1. Turn ignition switch ON and select “DATA MONITOR” mode with CONSULT-II.
2. Start engine and warm it up to the normal operating temperature.
3. Maintain the following conditions for at least 6 consecutive seconds.
   Hold the accelerator pedal as steady as possible.

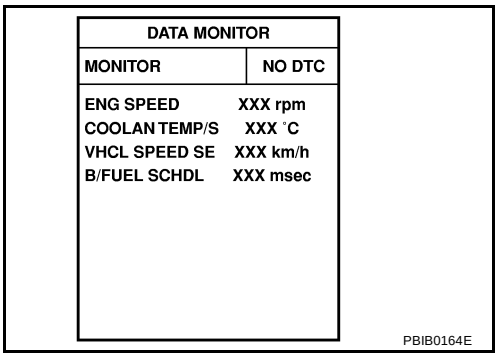

ENG SPEED	1,200 - 2,000 rpm (A constant rotation is maintained.)
COOLAN TEMP/S	More than 60°C (140°F)
Selector lever	P or N position

4. Let engine idle for 10 seconds.
5. If 1st trip DTC is detected, check possible cause items.
   If 1st trip DTC is not detected, go to next step.
6. Maintain the following conditions for at least 20 consecutive seconds.

ENG SPEED	1,700 - 3,175 rpm (A constant rotation is maintained.)
COOLAN TEMP/S	70 - 105°C (158 - 221°F)
Selector lever	1st or 2nd position
Driving location uphill	Driving vehicle uphill (Increased engine load will help maintain the driving conditions required for this test.)

7. If 1st trip DTC is detected, check possible cause items.

Overall Function Check

ABS00GTT

Use this procedure to check the overall function of the intake valve timing control system. During this check, a 1st trip DTC might not be confirmed.

WITHOUT CONSULT-II

1. Start engine and warm it up to normal operating temperature.
2. Turn ignition switch OFF and wait at least 10 seconds.
3. Turn ignition switch ON.
4. Set the tester probe between ECM terminal 11 [IVT control solenoid valve (bank 1) signal] or 10 [IVT control solenoid valve (bank 2) signal] and ground.
5. Start engine and let it idle.
6. Check the voltage under the following conditions.
   Verify that the oscilloscope screen shows the signal wave as shown below.

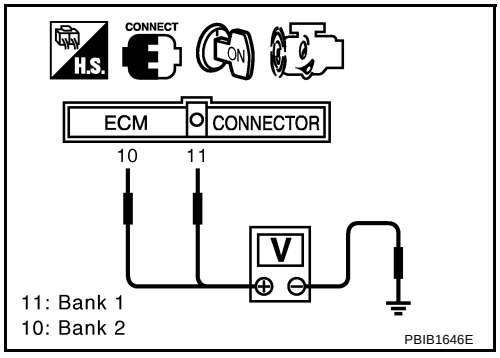

Conditions	Voltage
Idle speed	BATTERY VOLTAGE (11 - 14V)
Engine speed is more than 2,000 rpm.	7V - 12V ★ 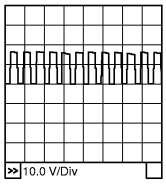 PBIB1790E

★: Average voltage for pulse signal (Actual pulse signal can be confirmed by oscilloscope.)

7. If NG, check possible cause items.

DTC P0102, P0103 MAF SENSOR

PFP:22680

Component Description

ABS00GTX

The mass air flow sensor is placed in the stream of intake air. It measures the intake flow rate by measuring a part of the entire intake flow. The mass air flow sensor controls the temperature of the hot wire to a certain amount. The heat generated by the hot wire is reduced as the intake air flows around it. The more air, the greater the heat loss.
Therefore, the electric current supplied to hot wire is changed to maintain the temperature of the hot wire as air flow increases. The ECM detects the air flow by means of this current change.

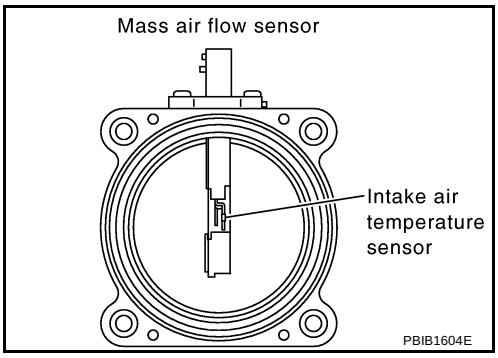

CONSULT-II Reference Value in Data Monitor Mode

ABS00GTY

Specification data are reference values.

MONITOR ITEM	CONDITION	SPECIFICATION
MAS A/F SE-B1	● See EC-328, "TROUBLE DIAGNOSIS - SPECIFICATION VALUE" .	

On Board Diagnosis Logic

ABS00GTZ

These self-diagnoses have the one trip detection logic.

DTC No.	Trouble diagnosis name	DTC detecting condition	Possible cause
P0102 0102	Mass air flow sensor circuit low input	An excessively low voltage from the sensor is sent to ECM.	● Harness or connectors (The sensor circuit is open or shorted.) ● Intake air leaks ● Mass air flow sensor
P0103 0103	Mass air flow sensor circuit high input	An excessively high voltage from the sensor is sent to ECM.	● Harness or connectors (The sensor circuit is open or shorted.) ● Mass air flow sensor

FAIL-SAFE MODE

When the malfunction is detected, the ECM enters fail-safe mode and the MIL lights up.

Detected items	Engine operating condition in fail-safe mode
Mass air flow sensor circuit	Engine speed will not rise more than 2,400 rpm due to the fuel cut.

DTC Confirmation Procedure

ABS00GU0

NOTE:
If DTC Confirmation Procedure has been previously conducted, always turn ignition switch OFF and wait at least 10 seconds before conducting the next test.

PROCEDURE FOR DTC P0102

With CONSULT-II

1. Turn ignition switch ON.
2. Select “DATA MONITOR” mode with CONSULT-II.
3. Start engine and wait at least 5 seconds.
4. If DTC is detected, check possible cause items.

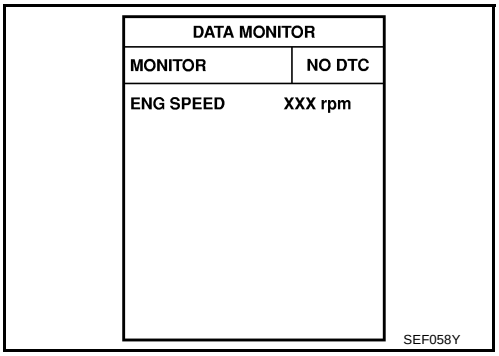

Without CONSULT-II

1. Start engine and wait at least 5 seconds.
2. Turn ignition switch OFF, wait at least 10 seconds and then turn ON.
3. Perform Diagnostic Test Mode II (Self-diagnostic results) with ECM.
4. If DTC is detected, check possible cause items.

PROCEDURE FOR DTC P0103

With CONSULT-II

1. Turn ignition switch ON.
2. Select “DATA MONITOR” mode with CONSULT-II.
3. Wait at least 5 seconds.
4. If DTC is detected, check possible cause items.
   If DTC is not detected, go to next step.
5. Start engine and wait at least 5 seconds.
6. If DTC is detected, check possible cause items.

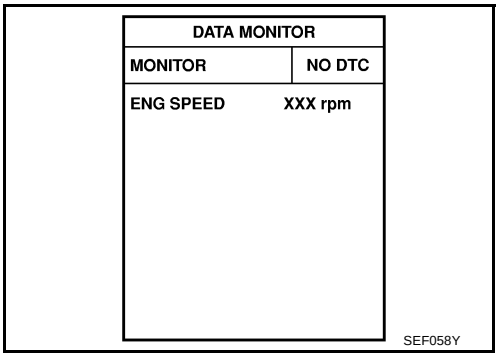

Without CONSULT-II

1. Turn ignition switch ON and wait at least 5 seconds.
2. Turn ignition switch OFF, wait at least 10 seconds and then turn ON.
3. Perform Diagnostic Test Mode II (Self-diagnostic results) with ECM.
4. If DTC is detected, check possible cause items.
   If DTC is not detected, go to next step.
5. Turn ignition switch OFF, wait at least 10 seconds.
6. Start engine and wait at least 5 seconds.
7. Turn ignition switch OFF, wait at least 10 seconds and then turn ON.
8. Perform Diagnostic Test Mode II (Self-diagnostic results) with ECM.
9. If DTC is detected, check possible cause items.

Wiring Diagram
LHD MODELS

ABS00GU1

EC-MAFS-01

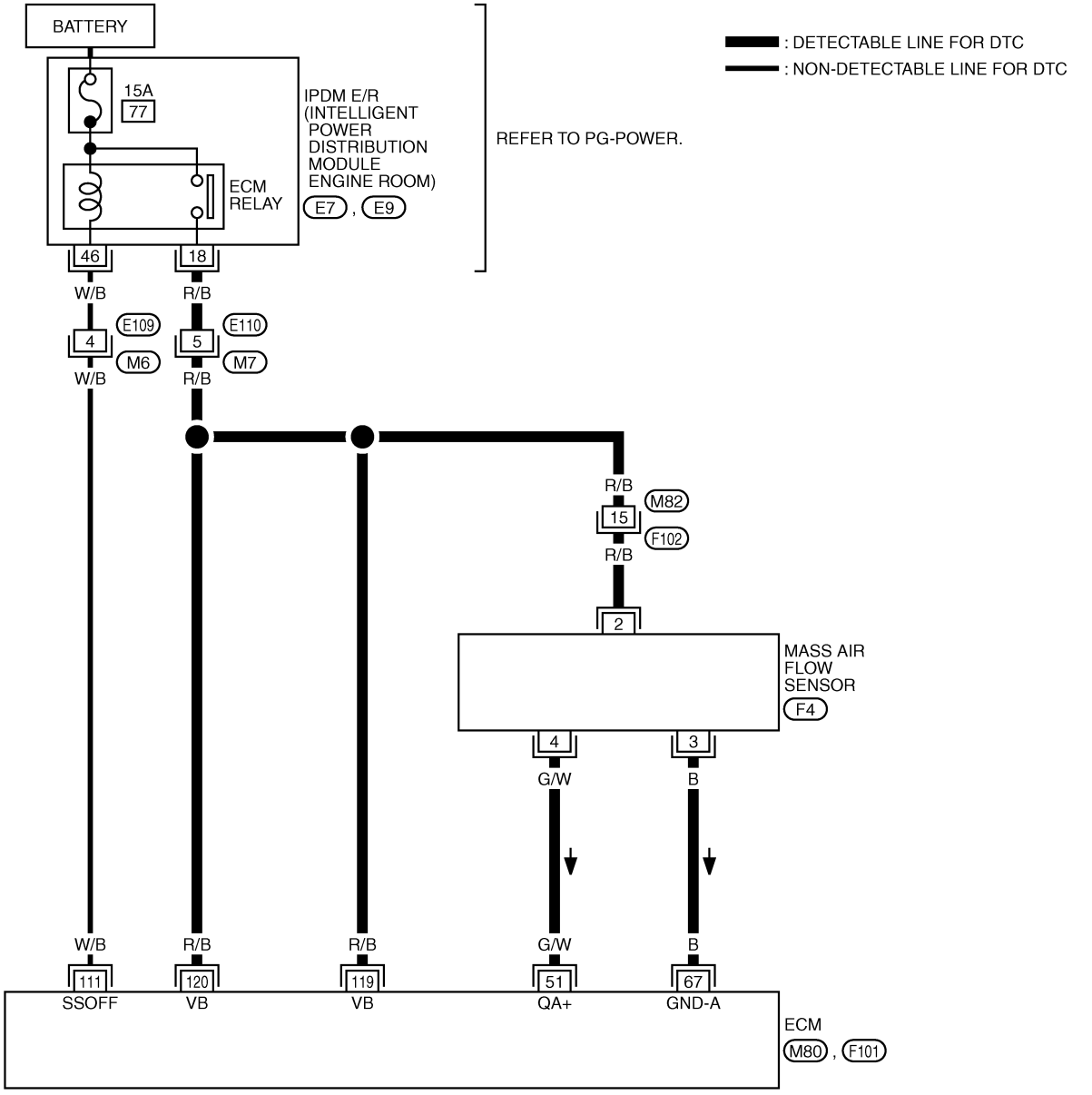

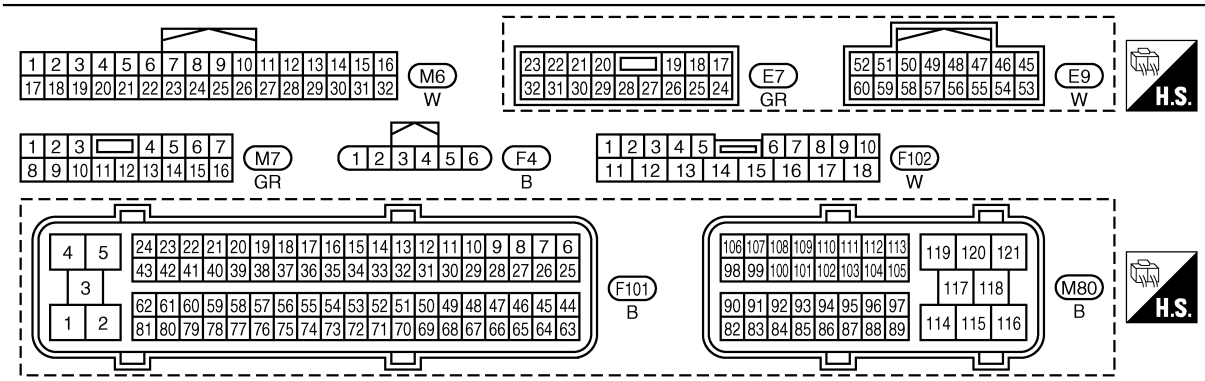

TBWB0489E

DTC P0117, P0118 ECT SENSOR

PFP:22630

Component Description

ABS00GU5

The engine coolant temperature sensor is used to detect the engine coolant temperature. The sensor modifies a voltage signal from the ECM. The modified signal returns to the ECM as the engine coolant temperature input. The sensor uses a thermistor which is sensitive to the change in temperature. The electrical resistance of the thermistor decreases as temperature increases.

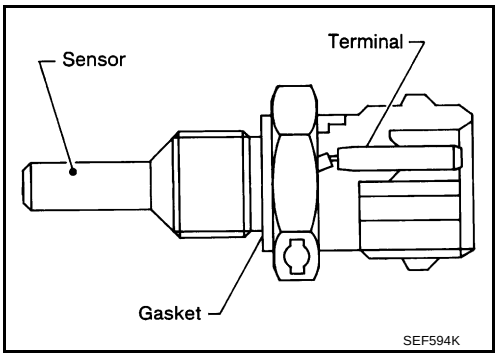

<Reference data>

Engine coolant temperature °C (°F)	Voltage* V	Resistance kΩ
–10 (14)	4.4	7.0 - 11.4
20 (68)	3.5	2.1 - 2.9
50 (122)	2.2	0.68 - 1.00
90 (194)	0.9	0.236 - 0.260

*: This data is reference value and is measured between ECM terminal 73 (Engine coolant temperature sensor) and ground.

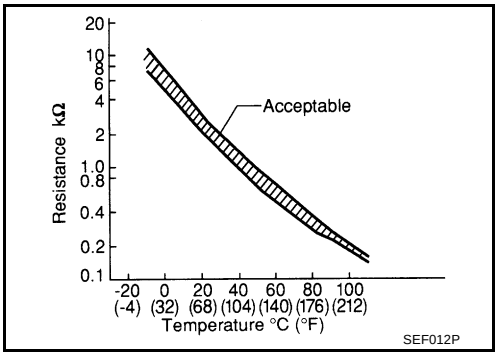

CAUTION:

Do not use ECM ground terminals when measuring input/output voltage. Doing so may result in damage to the ECM's transistor. Use a ground other than ECM terminals, such as the ground.

On Board Diagnosis Logic

ABS00GU6

DTC No.	Trouble Diagnosis Name	DTC Detecting Condition	Possible Cause
P0117 0117	Engine coolant temperature sensor circuit low input	An excessively low voltage from the sensor is sent to ECM.	● Harness or connectors (The sensor circuit is open or shorted.) ● Engine coolant temperature sensor
P0118 0118	Engine coolant temperature sensor circuit high input	An excessively high voltage from the sensor is sent to ECM.	

FAIL-SAFE MODE

ECM enters fail-safe mode when the malfunction is detected.

Detected items	Engine operating condition in fail-safe mode	
Engine coolant temperature sensor circuit	Engine coolant temperature will be determined by ECM based on the time after turning ignition switch ON or START. CONSULT-II displays the engine coolant temperature decided by ECM.	
	Condition	Engine coolant temperature decided (CONSULT-II display)
	Just as ignition switch is turned ON or START	40°C (104°F)
	More than approx. 4 minutes after ignition ON or START	80°C (176°F)
	Except as shown above	40 - 80°C (104 - 176°F) (Depends on the time)
	When the fail-safe system for engine coolant temperature sensor is activated, the cooling fan operates while engine is running.	

DTC Confirmation Procedure

ABS00GU7

NOTE:
If DTC Confirmation Procedure has been previously conducted, always turn ignition switch OFF and wait at least 10 seconds before conducting the next test.

WITH CONSULT-II

1. Turn ignition switch ON.
2. Select “DATA MONITOR” mode with CONSULT-II.
3. Wait at least 5 seconds.
4. If 1st trip DTC is detected, check possible cause items.

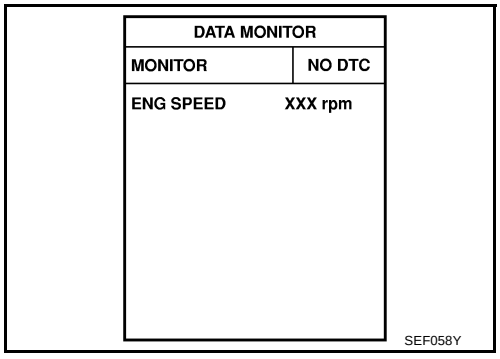

WITHOUT CONSULT-II

1. Turn ignition switch ON and wait at least 5 seconds.
2. Turn ignition switch OFF, wait at least 10 seconds and then turn ON.
3. Perform Diagnostic Test Mode II (Self-diagnostic results) with ECM.
4. If 1st trip DTC is detected, check possible cause items.

Wiring Diagram

ABS00GU8

EC-ECTS-01

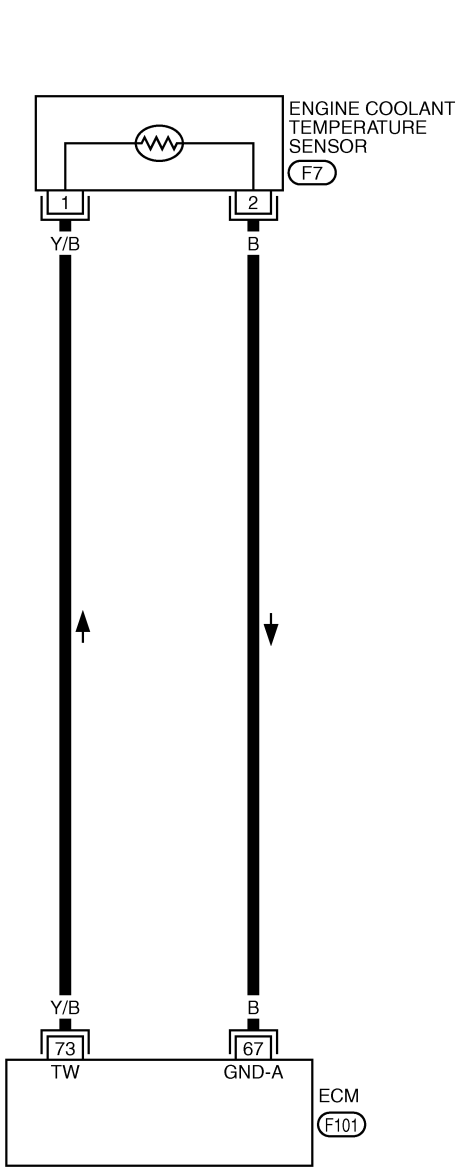

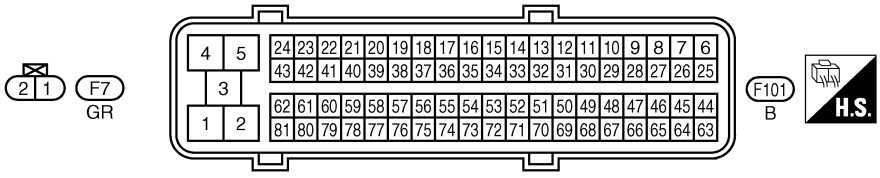

TBWA0691E

DTC P0122, P0123 TP SENSOR

PFP:16119

Component Description

ABS00GUC

Electric throttle control actuator consists of throttle control motor, throttle position sensor, etc. The throttle position sensor responds to the throttle valve movement.
The throttle position sensor has two sensors. These sensors are a kind of potentiometers which transform the throttle valve position into output voltage, and emit the voltage signal to the ECM. In addition, these sensors detect the opening and closing speed of the throttle valve and feed the voltage signals to the ECM. The ECM judges the current opening angle of the throttle valve from these signals and the ECM controls the throttle control motor to make the throttle valve opening angle properly in response to driving condition.

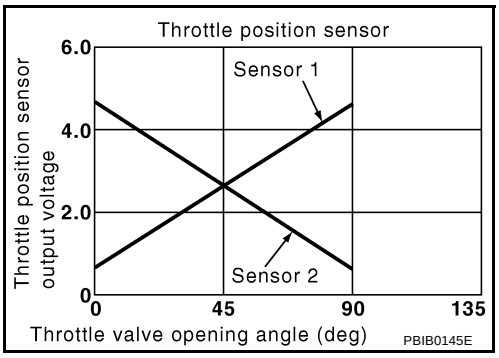

CONSULT-II Reference Value in Data Monitor Mode

ABS00GUD

Specification data are reference values.

MONITOR ITEM	CONDITION		SPECIFICATION
THRTL SEN 1 THRTL SEN 2*	● Ignition switch: ON (Engine stopped) ● Shift lever: D	Accelerator pedal: Fully released	More than 0.36V
		Accelerator pedal: Fully depressed	Less than 4.75V

*: Throttle position sensor 2 signal is converted by ECM internally. Thus, it differ from ECM terminal voltage signal.

On Board Diagnosis Logic

ABS00GUE

These self-diagnoses have the one trip detection logic.

DTC No.	Trouble diagnosis name	DTC detecting condition	Possible cause
P0122 0122	Throttle position sensor 2 circuit low input	An excessively low voltage from the TP sensor 2 is sent to ECM.	● Harness or connectors (TP sensor 2 circuit is open or shorted.) (APP sensor 2 circuit is shorted) ● Electric throttle control actuator (TP sensor 2) ● Accelerator pedal position sensor (APP sensor 2)
P0123 0123	Throttle position sensor 2 circuit high input	An excessively high voltage from the TP sensor 2 is sent to ECM.	

FAIL-SAFE MODE

When the malfunction is detected, ECM enters fail-safe mode and the MIL lights up.

Engine operation condition in fail-safe mode
The ECM controls the electric throttle control actuator in regulating the throttle opening in order for the idle position to be within +10 degrees. The ECM regulates the opening speed of the throttle valve to be slower than the normal condition. So, the acceleration will be poor.

DTC Confirmation Procedure

ABS00GUF

NOTE:
If DTC Confirmation Procedure has been previously conducted, always turn ignition switch OFF and wait at least 10 seconds before conducting the next test.
TESTING CONDITION:
Before performing the following procedure, confirm that battery voltage is more than 10V at idle.

WITH CONSULT-II

1. Turn ignition switch ON.
2. Select “DATA MONITOR” mode with CONSULT-II.
3. Start engine and let it idle for 1 second.
4. If DTC is detected, check possible cause items.

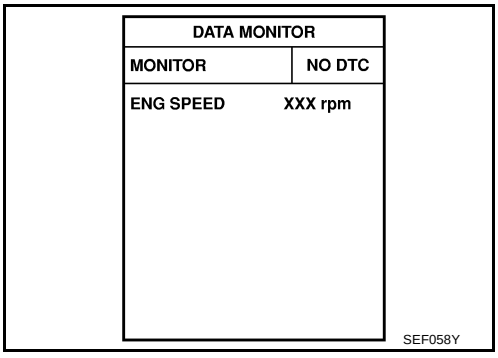

WITHOUT CONSULT-II

1. Start engine and let it idle for 1 second.
2. Turn ignition switch OFF, wait at least 10 seconds and then turn ON.
3. Perform Diagnostic Test Mode II (Self-diagnostic results) with ECM.
4. If DTC is detected, check possible cause items.

Wiring Diagram
LHD MODELS

ABS00GUG

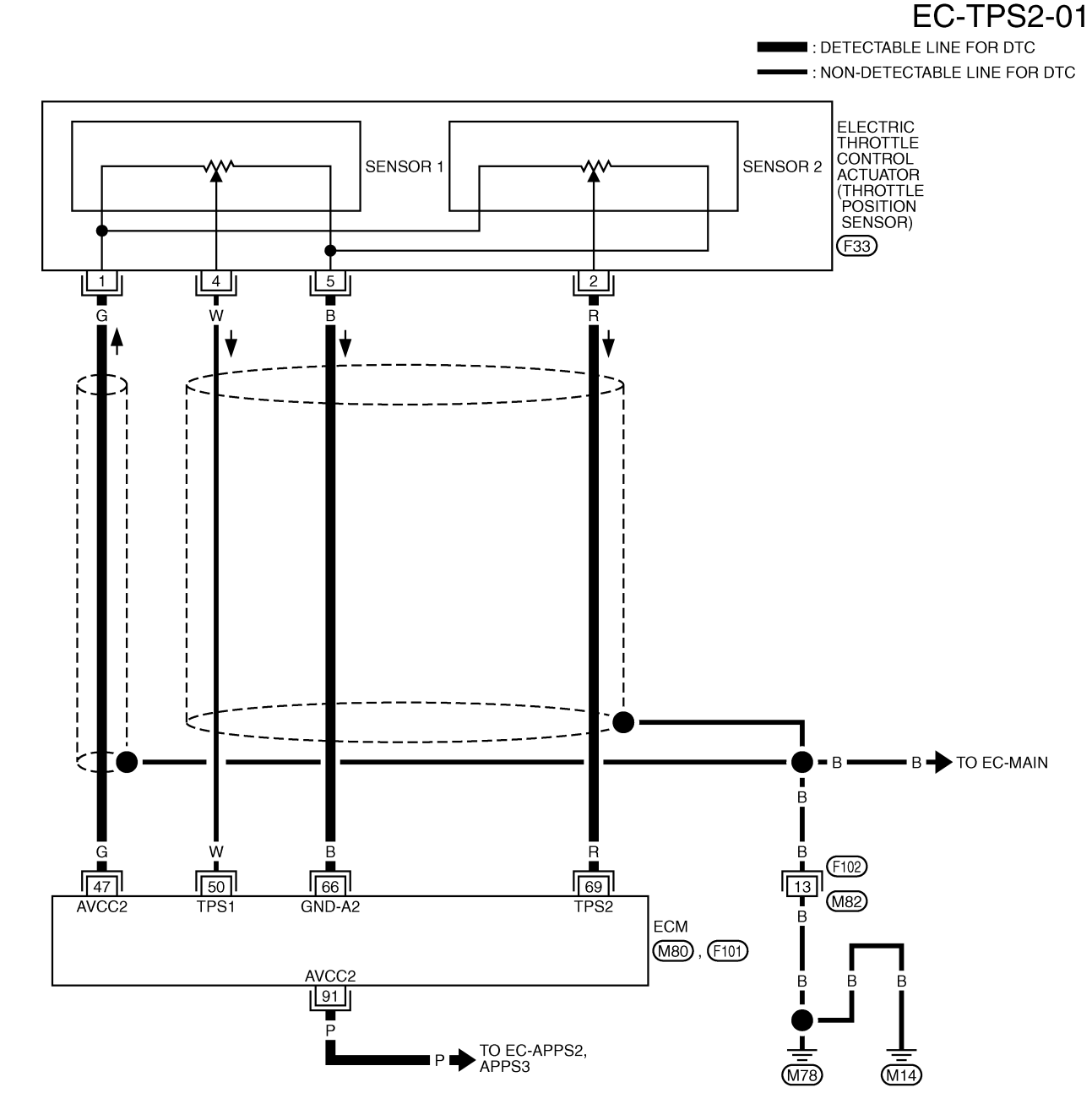

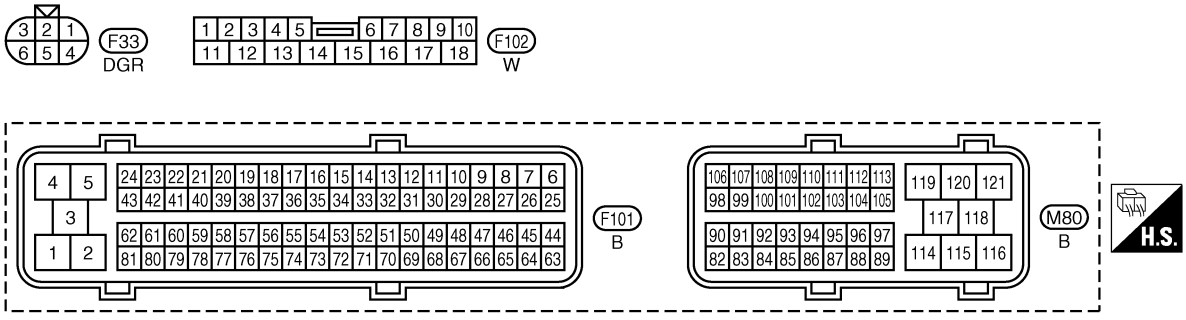

TBWA0699E

DTC P0138, P0158 HO2S2

PFP:226A0

Component Description

ABS00H2N

The heated oxygen sensor 2, after three way catalyst (manifold), monitors the oxygen level in the exhaust gas on each bank.
Even if switching characteristics of the air fuel ratio (A/F) sensor 1 are shifted, the air-fuel ratio is controlled to stoichiometric, by the signal from the heated oxygen sensor 2.
This sensor is made of ceramic zirconia. The zirconia generates voltage from approximately 1V in richer conditions to 0V in leaner conditions.
Under normal conditions the heated oxygen sensor 2 is not used for engine control operation.

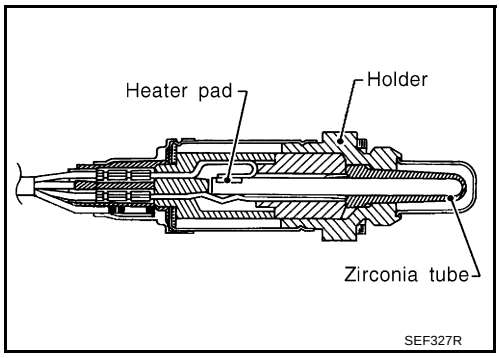

CONSULT-II Reference Value in Data Monitor Mode

ABS00H2O

Specification data are reference values.

MONITOR ITEM	CONDITION	SPECIFICATION
HO2S2 (B1) HO2S2 (B2)	● Revving engine from idle to 3,000 rpm quickly after the following conditions are met – Engine: After warning up – Keeping the engine speed between 3,500 and 4,000 rpm for 1 minute and at idle for 1 minute under no load	0 - 0.3V ←→ Approx. 0.6 - 1.0V
HO2S2 MNTR (B1) HO2S2 MNTR (B2)		LEAN ←→ RICH

On Board Diagnosis Logic

ABS00H2P

The heated oxygen sensor 2 has a much longer switching time between rich and lean than the air fuel ratio (A/F) sensor 1. The oxygen storage capacity of the three way catalyst (manifold) causes the longer switching time. To judge the malfunctions of heated oxygen sensor 2, ECM monitors whether the voltage is unusually high during the various driving condition such as fuel-cut.

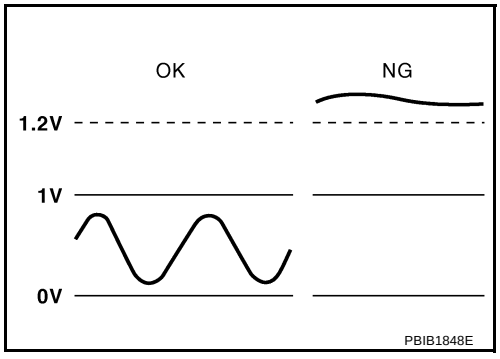

DTC No.	Trouble diagnosis name	DTC detecting condition	Possible cause
P0138 0138 (Bank 1)	Heated oxygen sensor 2 circuit high voltage	An excessively high voltage from the sensor is sent to ECM.	● Harness or connectors (The sensor circuit is open or shorted) ● Heated oxygen sensor 2
P0158 0158 (Bank 2)			

DTC Confirmation Procedure

ABS00H2Q

NOTE:
If DTC Confirmation Procedure has been previously conducted, always turn ignition switch OFF and wait at least 10 seconds before conducting the next test.

WITH CONSULT-II

1. Turn ignition switch ON and select “DATA MONITOR” mode with CONSULT-II.
2. Start engine and warm it up to the normal operating temperature.
3. Turn ignition switch OFF and wait at least 10 seconds.
4. Start engine and keep the engine speed between 3,500 and 4,000 rpm for at least 1 minute under no load.
5. Let engine idle for 2 minutes.
6. If 1st trip DTC is detected, check possible cause items.

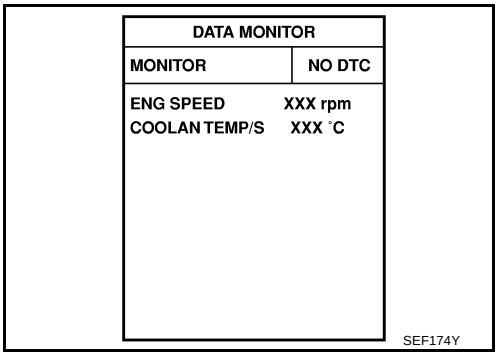

WITHOUT CONSULT-II

1. Start engine and warm it up to the normal operating temperature.
2. Turn ignition switch OFF and wait at least 10 seconds.
3. Start engine and keep the engine speed between 3,500 and 4,000 rpm for at least 1 minute under no load.
4. Let engine idle for 2 minutes.
5. Turn ignition switch OFF and wait at least 10 seconds and then turn ON.
6. Perform Diagnostic Test Mode II (Self-diagnostic results) with ECM.
7. If 1st trip DTC is detected, check possible cause items.

Wiring Diagram

ABS00H2R

LHD MODELS

Bank 1

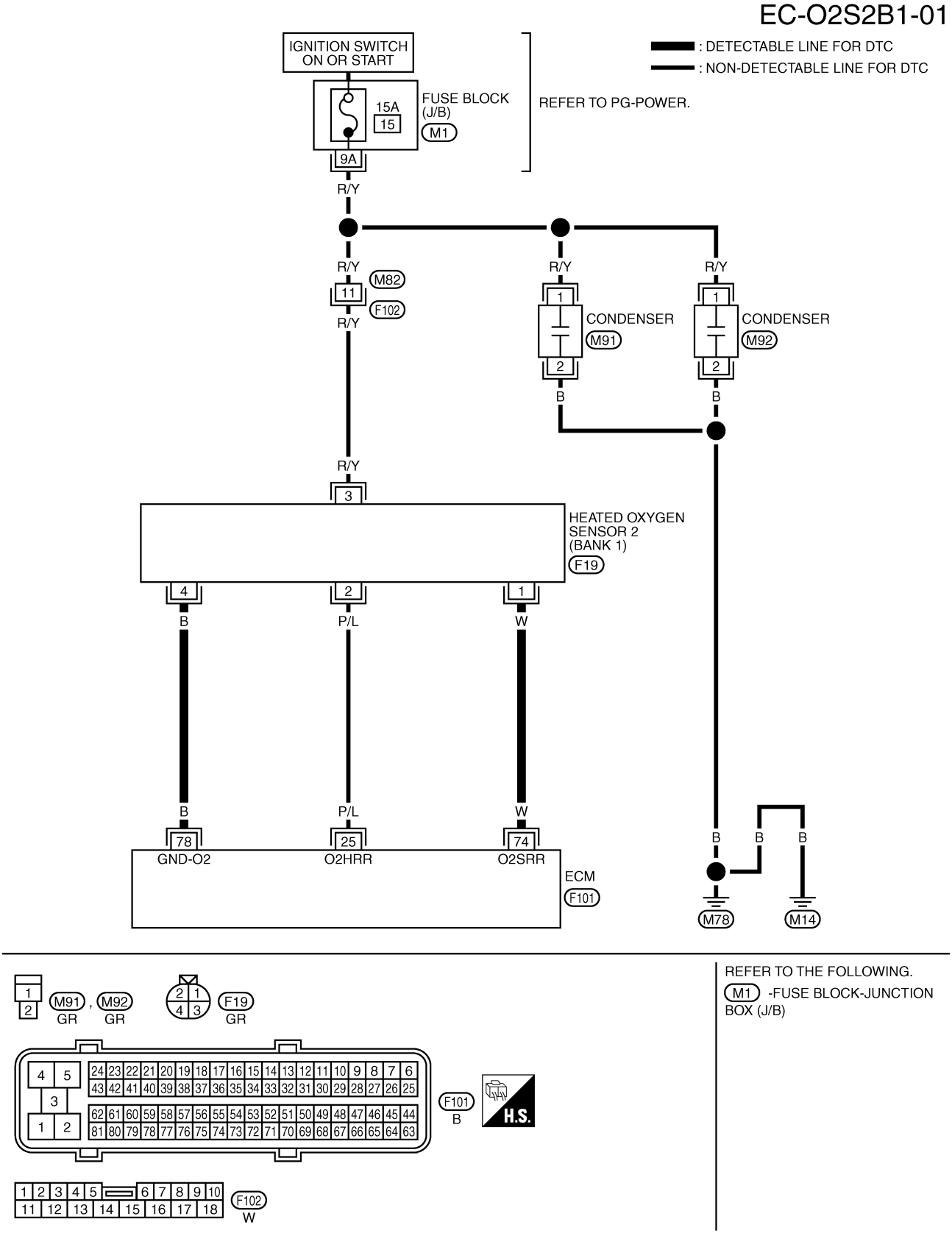

Bank 2

EC-O2S2B2-01

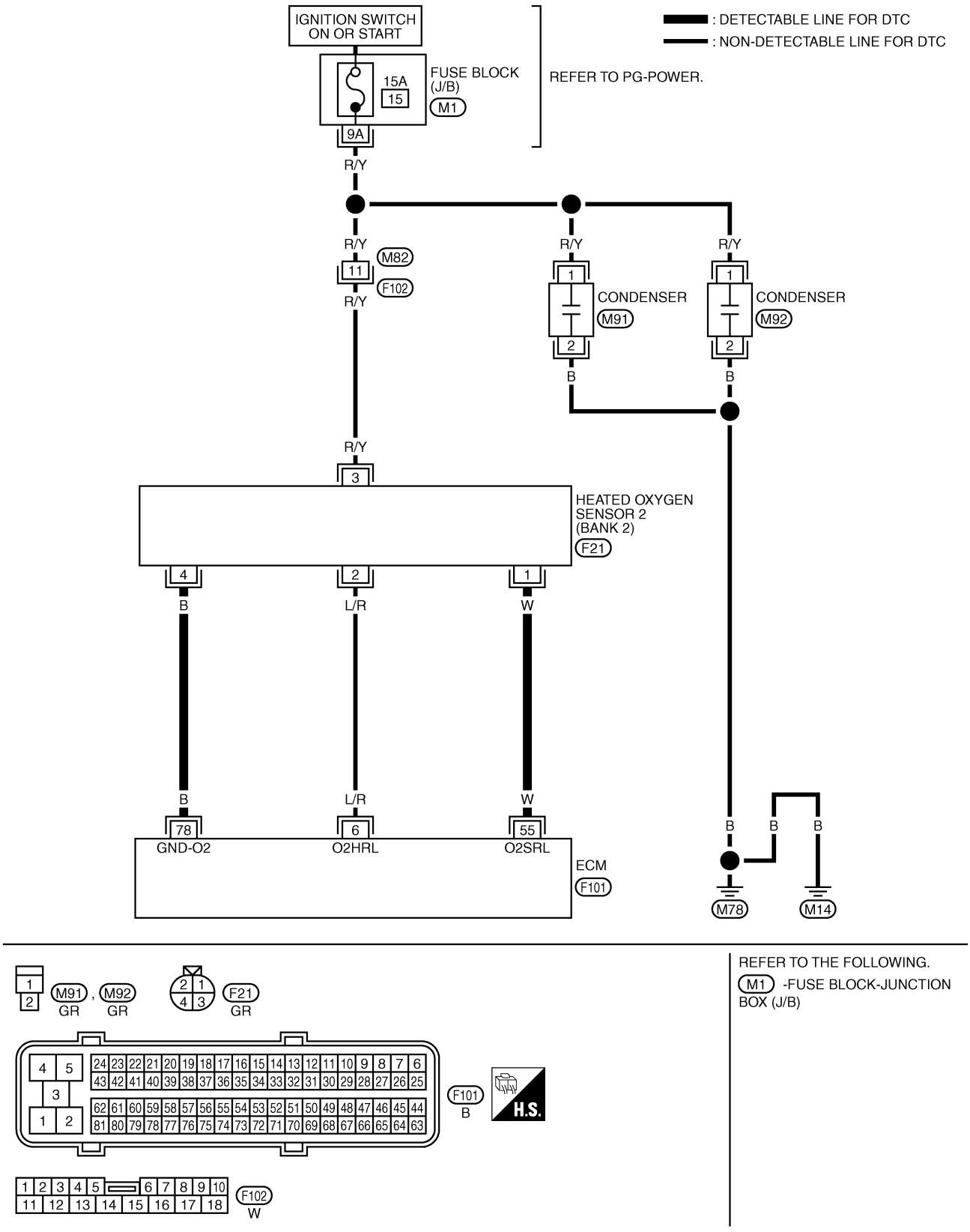

DTC P0222, P0223 TP SENSOR

PFP:16119

Component Description

ABS00GUK

Electric throttle control actuator consists of throttle control motor, throttle position sensor, etc. The throttle position sensor responds to the throttle valve movement.
The throttle position sensor has the two sensors. These sensors are a kind of potentiometers which transform the throttle valve position into output voltage, and emit the voltage signal to the ECM. In addition, these sensors detect the opening and closing speed of the throttle valve and feed the voltage signals to the ECM. The ECM judges the current opening angle of the throttle valve from these signals and the ECM controls the throttle control motor to make the throttle valve opening angle properly in response to driving condition.

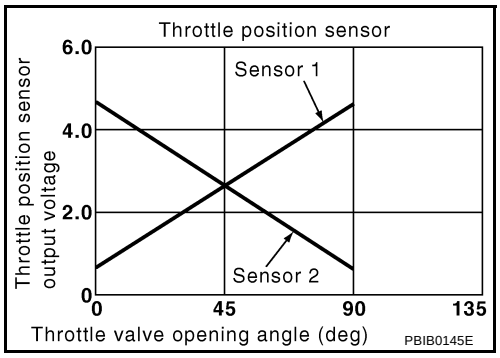

CONSULT-II Reference Value in Data Monitor Mode

ABS00GUL

Specification data are reference values.

MONITOR ITEM	CONDITION		SPECIFICATION
THRTL SEN 1 THRTL SEN 2*	● Ignition switch: ON (Engine stopped) ● Shift lever: D	Accelerator pedal: Fully released	More than 0.36V
		Accelerator pedal: Fully depressed	Less than 4.75V

*: Throttle position sensor 2 signal is converted by ECM internally. Thus, it differ from ECM terminal voltage signal.

On Board Diagnosis Logic

ABS00GUM

These self-diagnoses have the one trip detection logic.

DTC No.	Trouble diagnosis name	DTC detecting condition	Possible cause
P0222 0222	Throttle position sensor 1 circuit low input	An excessively low voltage from the TP sensor 1 is sent to ECM.	● Harness or connectors (TP sensor 1 circuit is open or shorted.) (APP sensor 2 circuit is shorted.) ● Electric throttle control actuator (TP sensor 1) ● Accelerator pedal position sensor (APP sensor 2)
P0223 0223	Throttle position sensor 1 circuit high input	An excessively high voltage from the TP sensor 1 is sent to ECM.	

FAIL-SAFE MODE

When the malfunction is detected, ECM enters fail-safe mode and the MIL lights up.

Engine operation condition in fail-safe mode
The ECM controls the electric throttle control actuator in regulating the throttle opening in order for the idle position to be within +10 degrees. The ECM regulates the opening speed of the throttle valve to be slower than the normal condition. So, the acceleration will be poor.

DTC Confirmation Procedure

ABS00GUN

NOTE:
If DTC Confirmation Procedure has been previously conducted, always turn ignition switch OFF and wait at least 10 seconds before conducting the next test.
TESTING CONDITION:
Before performing the following procedure, confirm that battery voltage is more than 10V at idle.

WITH CONSULT-II

1. Turn ignition switch ON.
2. Select “DATA MONITOR” mode with CONSULT-II.
3. Start engine and let it idle for 1 second.
4. If DTC is detected, check possible cause items.

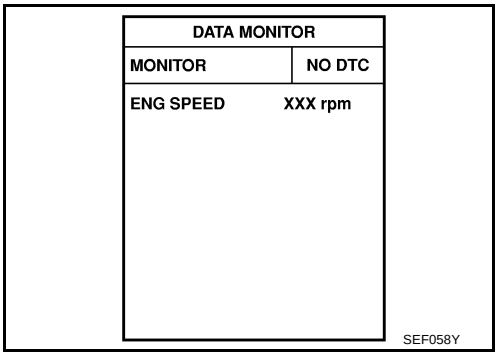

WITHOUT CONSULT-II

1. Start engine and let it idle for 1 second.
2. Turn ignition switch OFF, wait at least 10 seconds and then turn ON.
3. Perform Diagnostic Test Mode II (Self-diagnostic results) with ECM.
4. If DTC is detected, check possible cause items.

Wiring Diagram
LHD MODELS

ABS00GUO

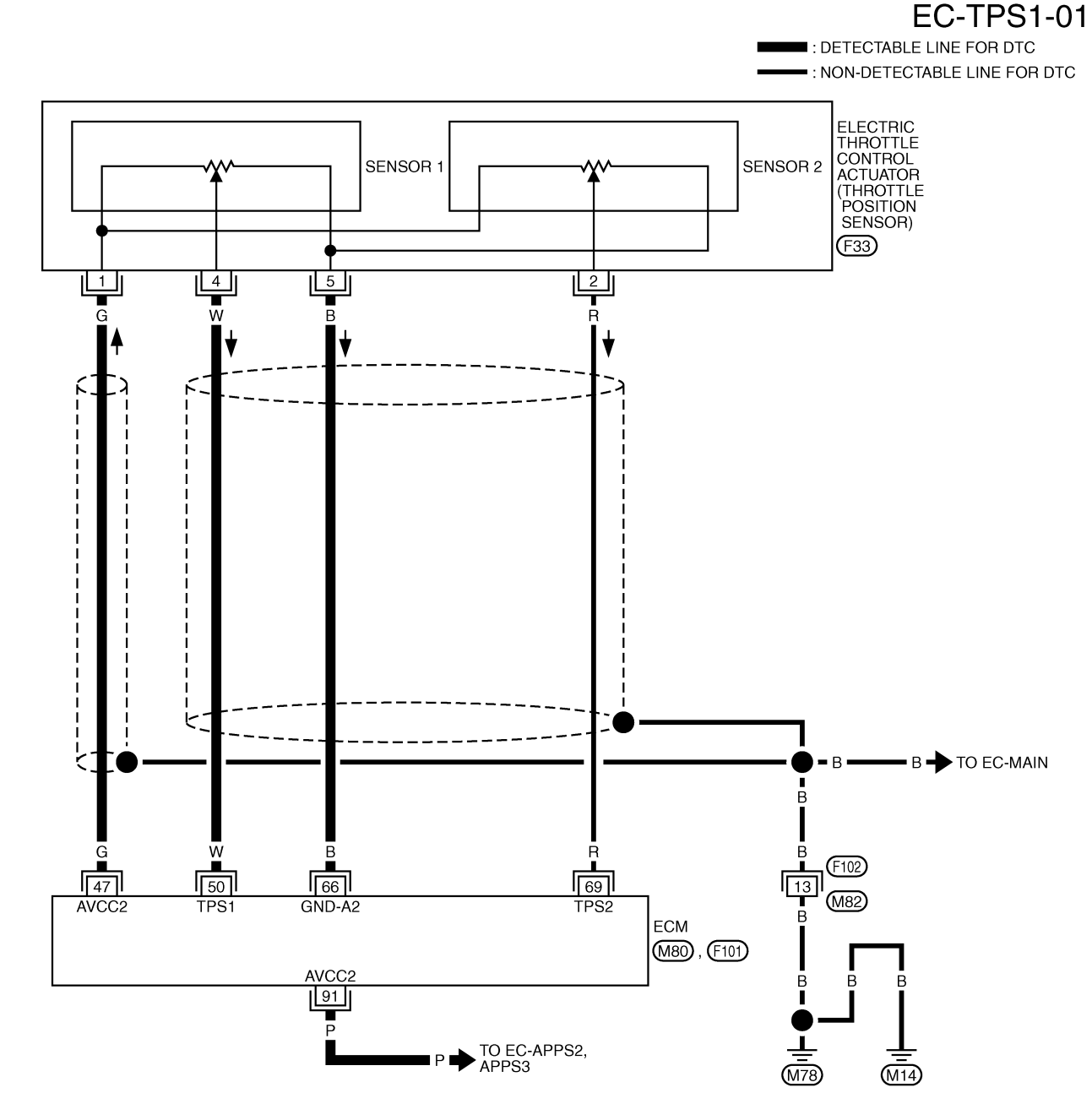

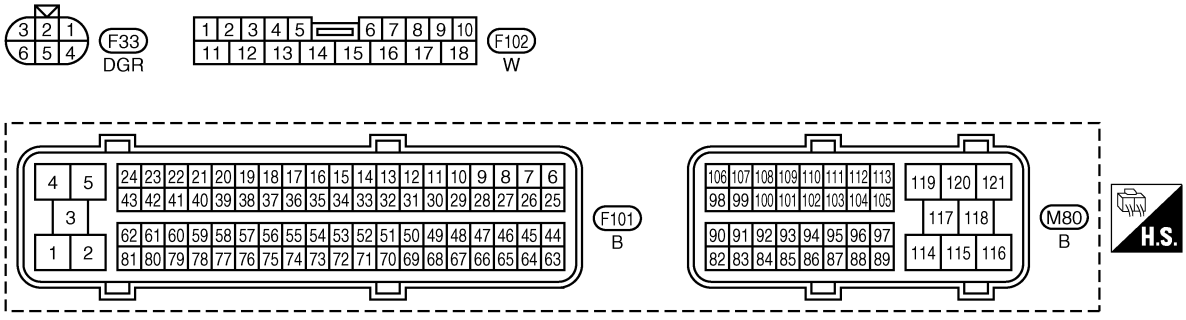

TBWA0698E

DTC P0327, P0328 KS

PFP:22060

Component Description

ABS00GUS

The knock sensor is attached to the cylinder block. It senses engine knocking using a piezoelectric element. A knocking vibration from the cylinder block is sensed as vibrational pressure. This pressure is converted into a voltage signal and sent to the ECM.

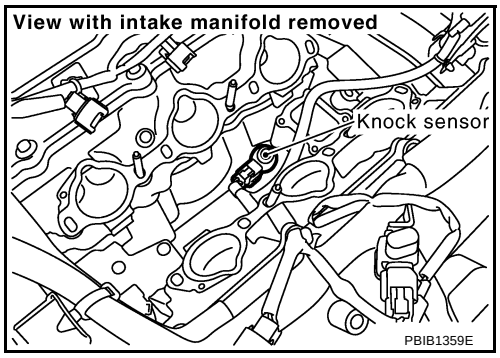

On Board Diagnosis Logic

ABS00GUT

The MIL will not light up for these diagnoses.

DTC No.	Trouble diagnosis name	DTC detected condition	Possible cause
P0327 0327	Knock sensor circuit low input	An excessively low voltage from the sensor is sent to ECM.	● Harness or connectors (The sensor circuit is open or shorted.) ● Knock sensor
P0328 0328	Knock sensor circuit high input	An excessively high voltage from the sensor is sent to ECM.	

DTC Confirmation Procedure

ABS00GUU

NOTE:
If DTC Confirmation Procedure has been previously conducted, always turn ignition switch OFF and wait at least 10 seconds before conducting the next test.
TESTING CONDITION:
Before performing the following procedure, confirm that battery voltage is more than 10V at idle.

WITH CONSULT-II

1. Turn ignition switch ON and select “DATA MONITOR” mode with CONSULT-II.
2. Start engine and run it for at least 5 seconds at idle speed.
3. If 1st trip DTC is detected, check possible cause items.

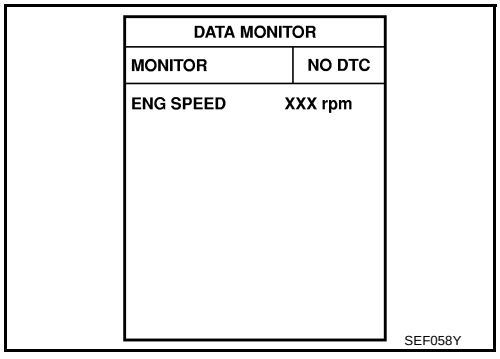

WITHOUT CONSULT-II

1. Start engine and run it for at least 5 seconds at idle speed.
2. Turn ignition switch OFF, wait at least 10 seconds and then turn ON.
3. Perform Diagnostic Test Mode II (Self-diagnostic results) with ECM.
4. If 1st trip DTC is detected, check possible cause items.

Wiring Diagram
LHD MODELS

ABS00GUV

EC-KS-01

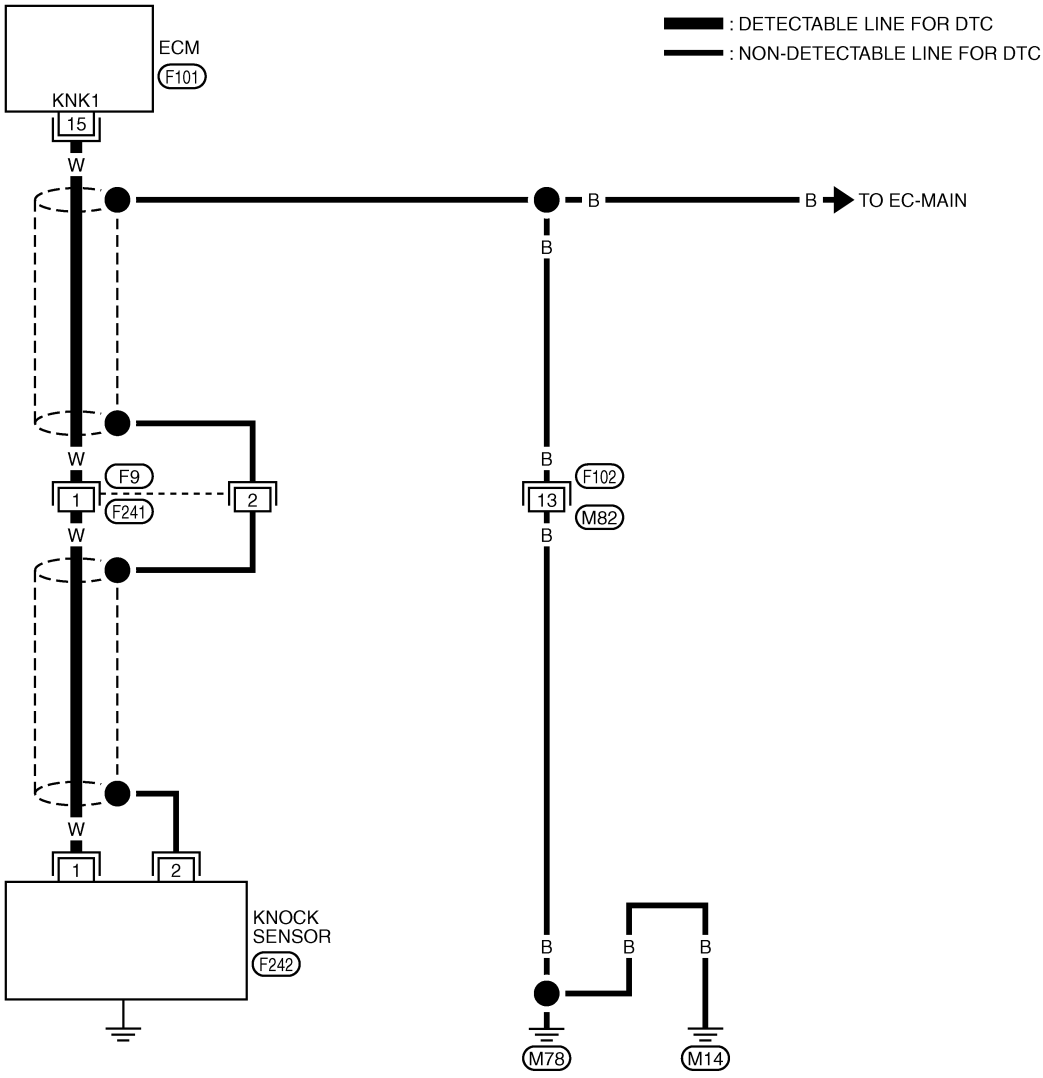

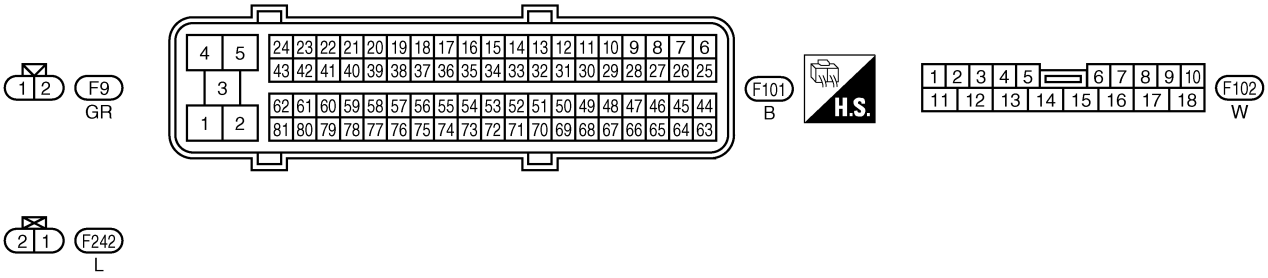

TBWA0700E

DTC P0335 CKP SENSOR (POS)

PFP:23731

Component Description

ABS00GUZ

The crankshaft position sensor (POS) is located on the oil pan facing the gear teeth (cogs) of the signal plate. It detects the fluctuation of the engine revolution.
The sensor consists of a permanent magnet and Hall IC.
When the engine is running, the high and low parts of the teeth cause the gap with the sensor to change.
The changing gap causes the magnetic field near the sensor to change.
Due to the changing magnetic field, the voltage from the sensor changes.
The ECM receives the voltage signal and detects the fluctuation of the engine revolution.
ECM receives the signals as shown in the figure.

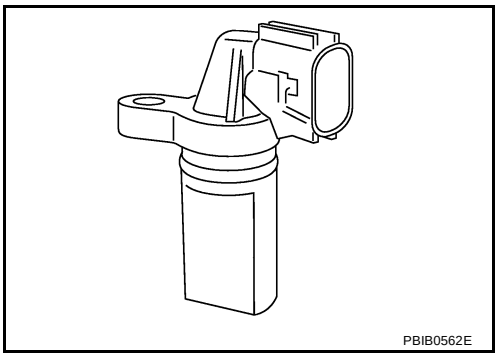

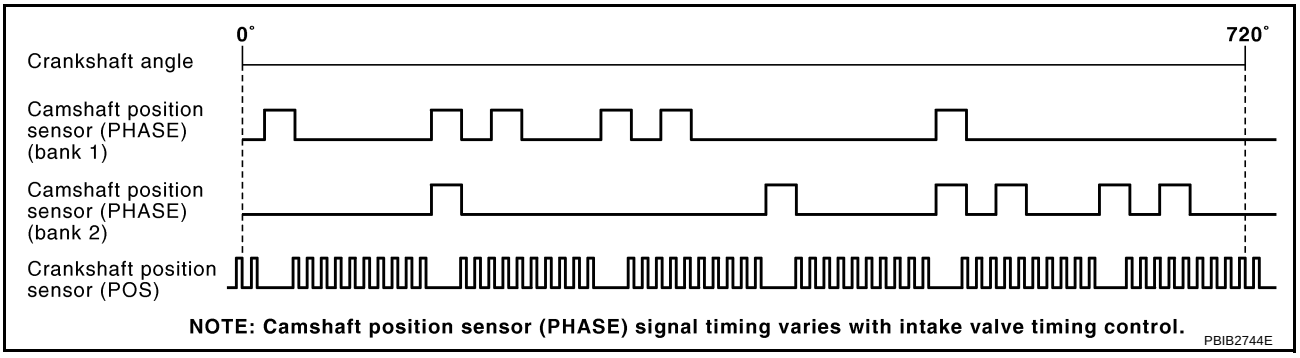

CONSULT-II Reference Value in Data Monitor Mode

ABS00GV0

Specification data are reference values.

MONITOR ITEM	CONDITION	SPECIFICATION
ENG SPEED	● Run engine and compare CONSULT-II value with the tachometer indication.	Almost the same speed as the tachometer indication.

On Board Diagnosis Logic

ABS00GV1

DTC No.	Trouble diagnosis name	DTC detecting condition	Possible cause
P0335 0335	Crankshaft position sensor (POS) circuit	● The crankshaft position sensor (POS) signal is not detected by the ECM during the first few seconds of engine cranking. ● The proper pulse signal from the crankshaft position sensor (POS) is not sent to ECM while the engine is running. ● The crankshaft position sensor (POS) signal is not in the normal pattern during engine running.	● Harness or connectors (The sensor circuit is open or shorted) ● Crankshaft position sensor (POS) ● Signal plate

DTC Confirmation Procedure

ABS00GV2

NOTE:
If DTC Confirmation Procedure has been previously conducted, always turn ignition switch OFF and wait at least 10 seconds before conducting the next test.
TESTING CONDITION:
Before performing the following procedure, confirm that battery voltage is more than 10.5V with ignition switch ON.

WITH CONSULT-II

1. Turn ignition switch ON and select “DATA MONITOR” mode with CONSULT-II.
2. Crank engine for at least 2 seconds and run it for at least 5 seconds at idle speed.
3. If 1st trip DTC is detected, check possible cause items.

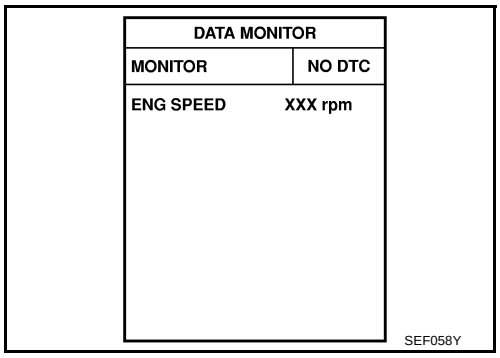

WITHOUT CONSULT-II

1. Crank engine for at least 2 seconds and run it for at least 5 seconds at idle speed.
2. Turn ignition switch OFF, wait at least 10 seconds and then turn ON.
3. Perform Diagnostic Test Mode II (Self-diagnostic results) with ECM.
4. If 1st trip DTC is detected, check possible cause items.

Wiring Diagram
LHD MODELS

ABS00GV3

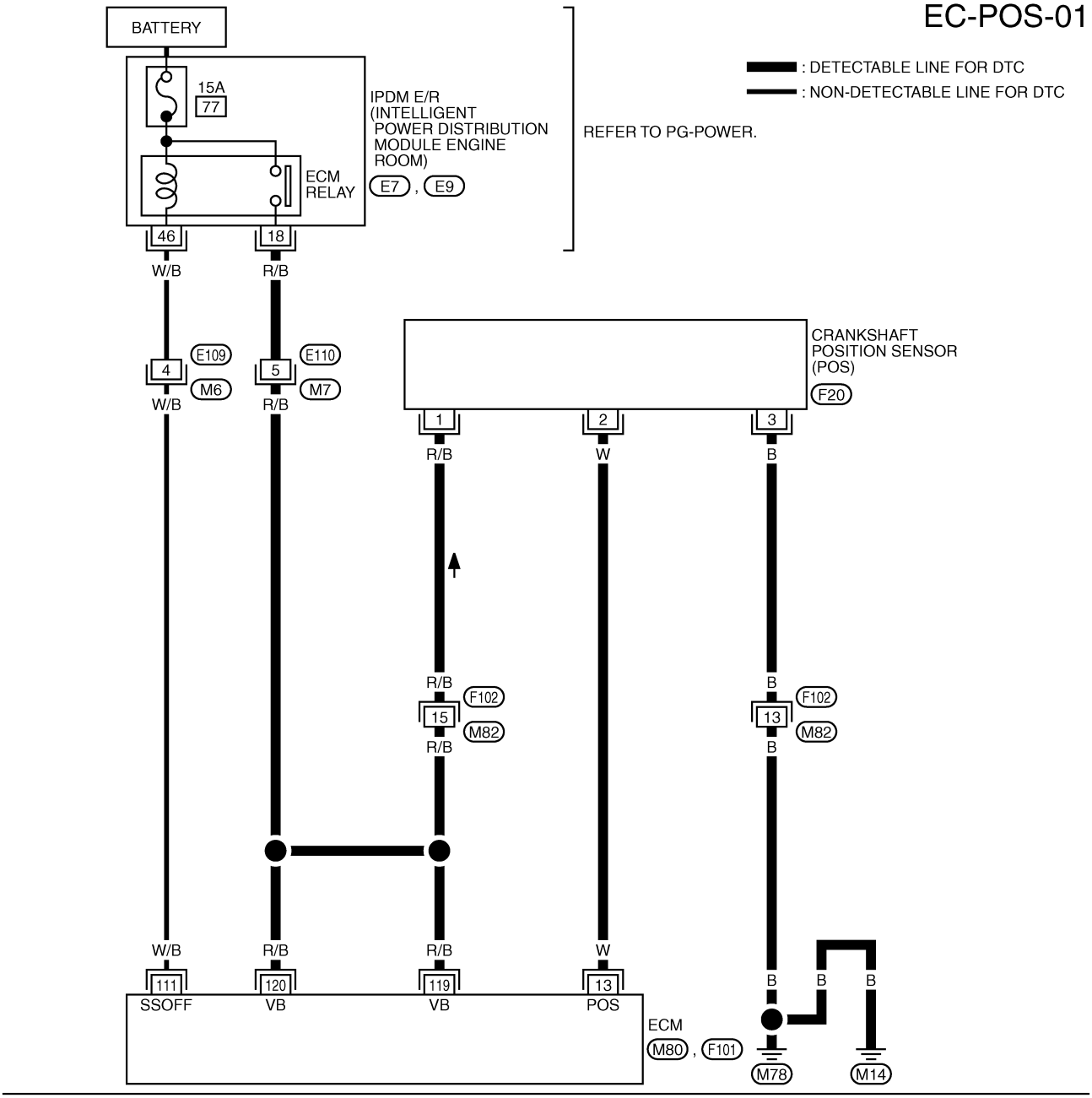

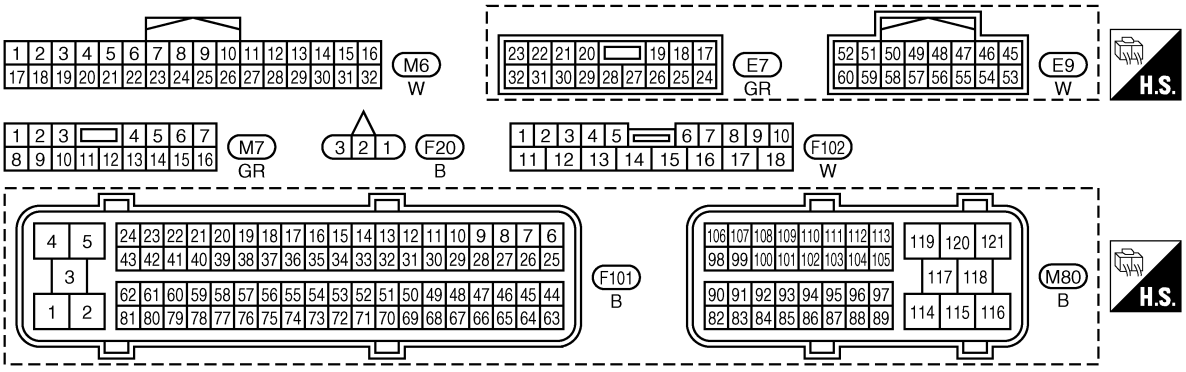

TBWB0500E

DTC P0340, P0345 CMP SENSOR (PHASE)

PFP:23731

Component Description

ABS00GV7

The camshaft position sensor (PHASE) senses the retraction of intake valve camshaft to identify a particular cylinder. The camshaft position sensor (PHASE) senses the piston position.
When the crankshaft position sensor (POS) system becomes inoperative, the camshaft position sensor (PHASE) provides various controls of engine parts instead, utilizing timing of cylinder identification signals.
The sensor consists of a permanent magnet and Hall IC.
When engine is running, the high and low parts of the teeth cause the gap with the sensor to change.
The changing gap causes the magnetic field near the sensor to change.
Due to the changing magnetic field, the voltage from the sensor changes.
ECM receives the signals as shown in the figure.

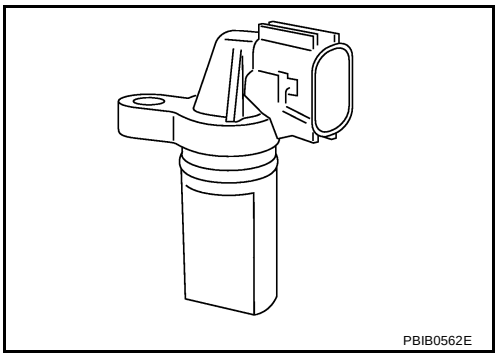

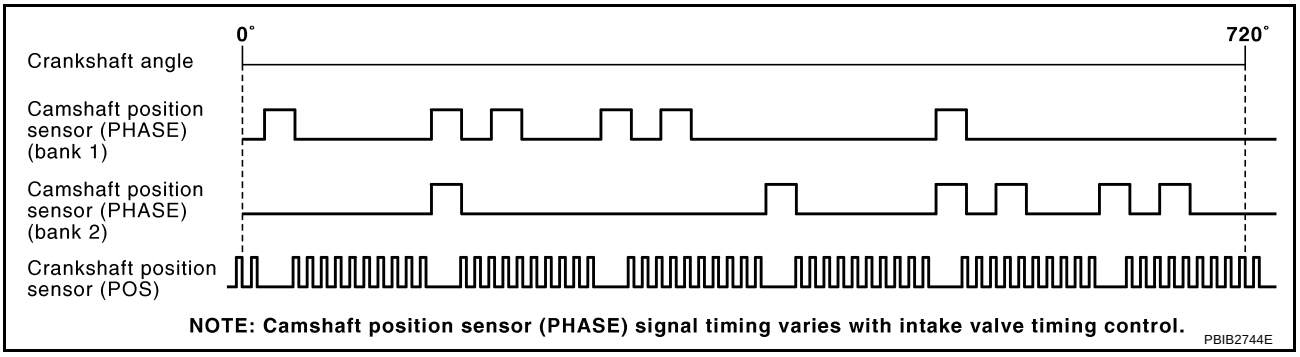

On Board Diagnosis Logic

ABS00GV8

DTC No.	Trouble diagnosis name	DTC detecting condition	Possible cause
P0340 0340 (Bank 1)	Camshaft position sensor (PHASE) circuit	● The cylinder No. signal is not sent to ECM for the first few seconds during engine cranking. ● The cylinder No. signal is not sent to ECM during engine running. ● The cylinder No. signal is not in the normal pattern during engine running.	● Harness or connectors (The sensor circuit is open or shorted) ● Camshaft position sensor (PHASE) ● Camshaft (Intake) ● Starter motor (Refer to SC-4, "STARTING SYSTEM" .) ● Starting system circuit (Refer to SC-4, "STARTING SYSTEM" .) ● Dead (Weak) battery
P0345 0345 (Bank 2)			

DTC Confirmation Procedure

ABS00GV9

NOTE:
If DTC Confirmation Procedure has been previously conducted, always turn ignition switch OFF and wait at least 10 seconds before conducting the next test.
TESTING CONDITION:
Before performing the following procedure, confirm that battery voltage is more than 10.5V with ignition switch ON.

WITH CONSULT-II

1. Turn ignition switch ON.
2. Select “DATA MONITOR” mode with CONSULT-II.
3. Crank engine for at least 2 seconds and run it for at least 5 seconds at idle speed.
4. If 1st trip DTC is detected, check possible cause items.
   If 1st trip DTC is not detected, go to next step.
5. Maintaining engine speed at more than 800 rpm for at least 5 seconds.
6. If 1st trip DTC is detected, check possible cause items.

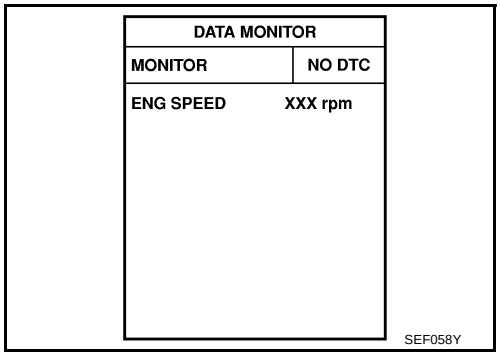

WITHOUT CONSULT-II

1. Crank engine for at least 2 seconds and run it for at least 5 seconds at idle speed.
2. Turn ignition switch OFF, wait at least 10 seconds and then turn ON.
3. Perform Diagnostic Test Mode II (Self-diagnostic results) with ECM.
4. If 1st trip DTC is detected, check possible cause items.
   If 1st trip DTC is not detected, go to next step.
5. Start engine and maintaining engine speed at more than 800 rpm for at least 5 seconds.
6. Turn ignition switch OFF, wait at least 10 seconds and then turn ON.
7. Perform Diagnostic Test Mode II (Self-diagnostic results) with ECM.
8. If 1st trip DTC is detected, check possible cause items.

Wiring Diagram

ABS00GVA

LHD MODELS

Bank 1

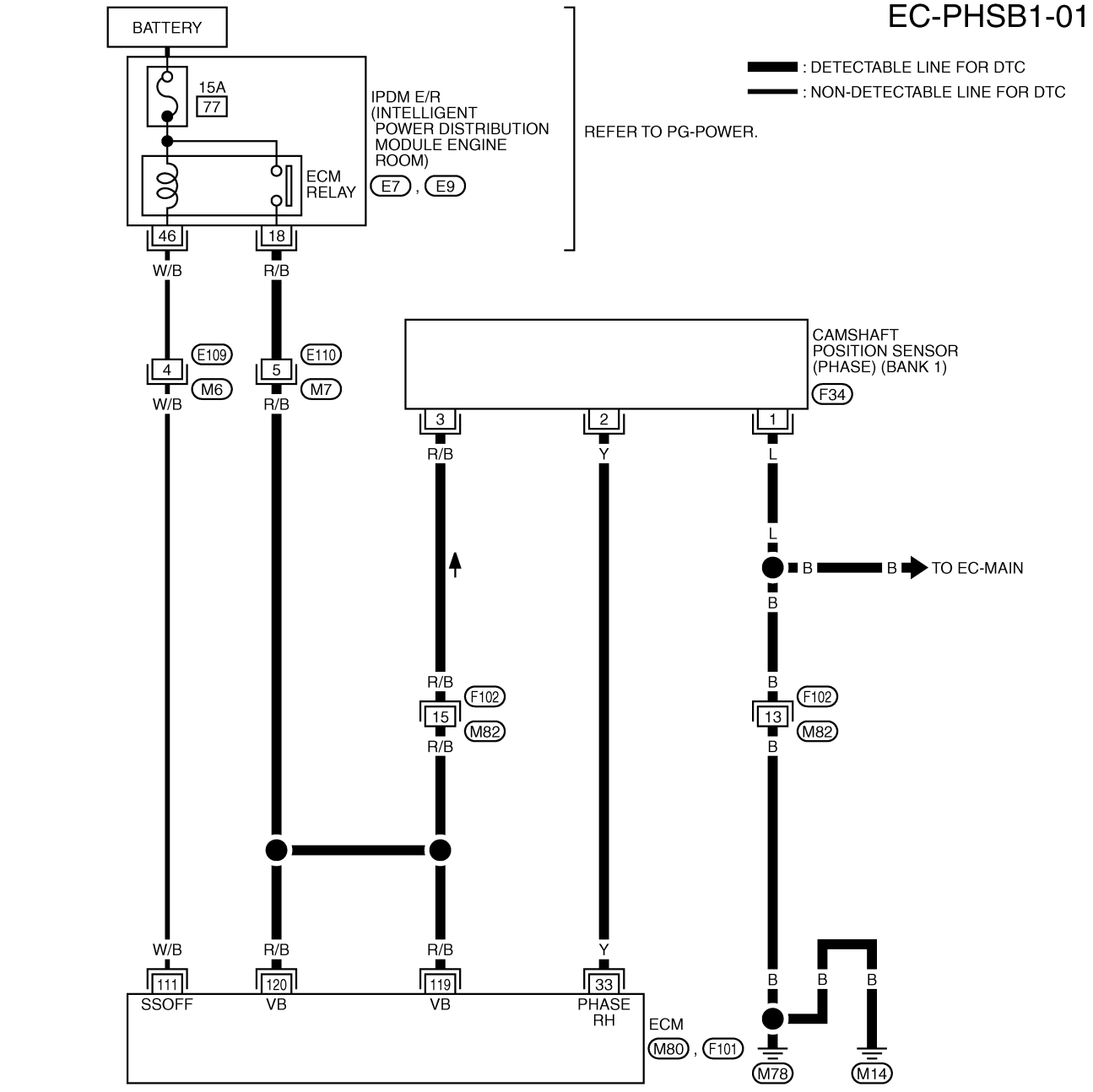

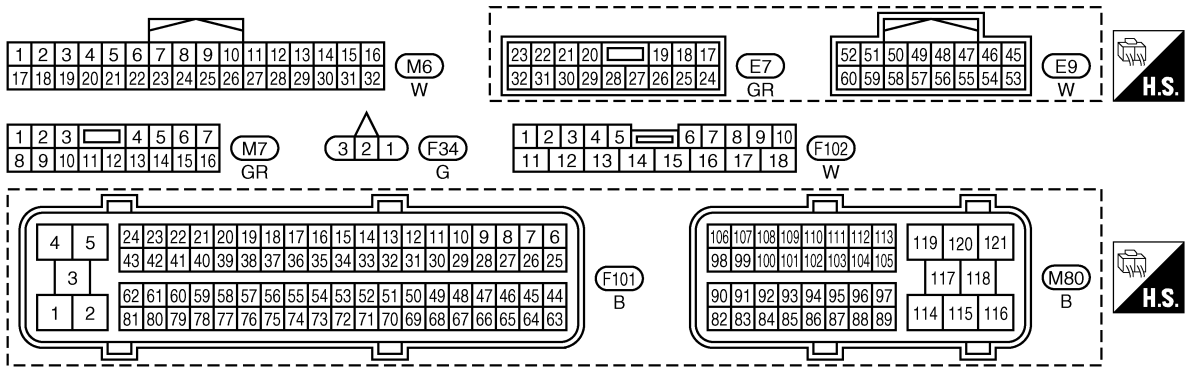

TBWB0502E

Bank 2

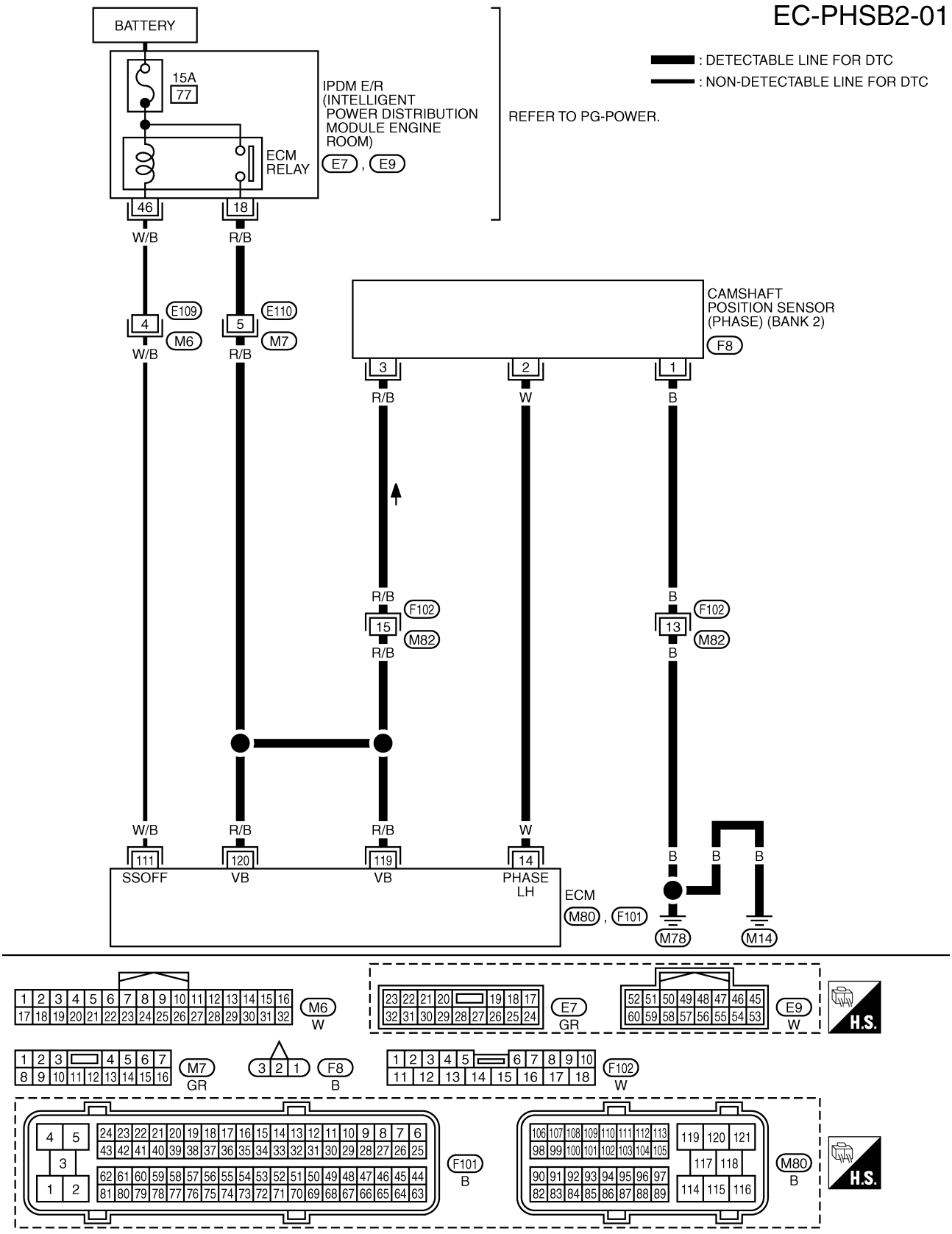

TBWB0504E

DTC P0550 PSP SENSOR

PFP:49763

Component Description

ABS00GVJ

Power steering pressure (PSP) sensor is installed to the power steering high-pressure tube and detects a power steering load. This sensor is a potentiometer which transforms the power steering load into output voltage, and emits the voltage signal to the ECM. The ECM controls the electric throttle control actuator and adjusts the throttle valve opening angle to increase the engine speed and adjusts the idle speed for the increased load.

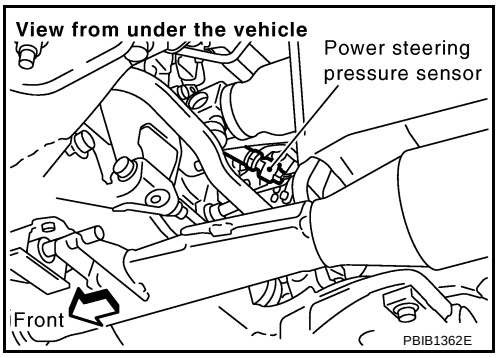

CONSULT-II Reference Value in Data Monitor Mode

ABS00GVK

Specification data are reference values.

MONITOR ITEM	CONDITION		SPECIFICATION
PW/ST SIGNAL	● Engine: After warming up, idle the engine	Steering wheel: Not being turned	OFF
		Steering wheel: Being turned.	ON

On Board Diagnosis Logic

ABS00GVL

The MIL will not light up for this diagnosis.

NOTE:
If DTC P0550 is displayed with DTC P1229, first perform the trouble diagnosis for DTC P1229. Refer to EC-436 .

DTC No.	Trouble diagnosis name	DTC detecting condition	Possible cause
P0550 0550	Power steering pressure sensor circuit	An excessively low or high voltage from the sensor is sent to ECM.	● Harness or connectors (The sensor circuit is open or shorted) ● Power steering pressure sensor

DTC Confirmation Procedure

ABS00GVM

NOTE:
If DTC Confirmation Procedure has been previously conducted, always turn ignition switch OFF and wait at least 10 seconds before conducting the next test.

WITH CONSULT-II

1. Turn ignition switch ON.
2. Select “DATA MONITOR” mode with CONSULT-II.
3. Start engine and let it idle for at least 5 seconds.
4. If 1st trip DTC is detected, check possible cause items.

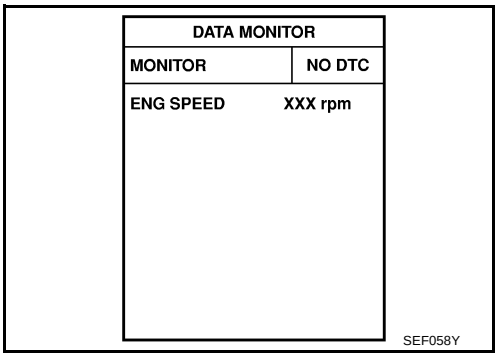

WITHOUT CONSULT-II

1. Start engine and let it idle for at least 5 seconds.
2. Turn ignition switch OFF, wait at least 10 seconds and then turn ON.
3. Perform Diagnostic Test Mode II (Self-diagnostic results) with ECM.
4. If 1st trip DTC is detected, check possible cause items.

Wiring Diagram

ABS00GVN

EC-PS/SEN-01

: DETECTABLE LINE FOR DTC
: NON-DETECTABLE LINE FOR DTC

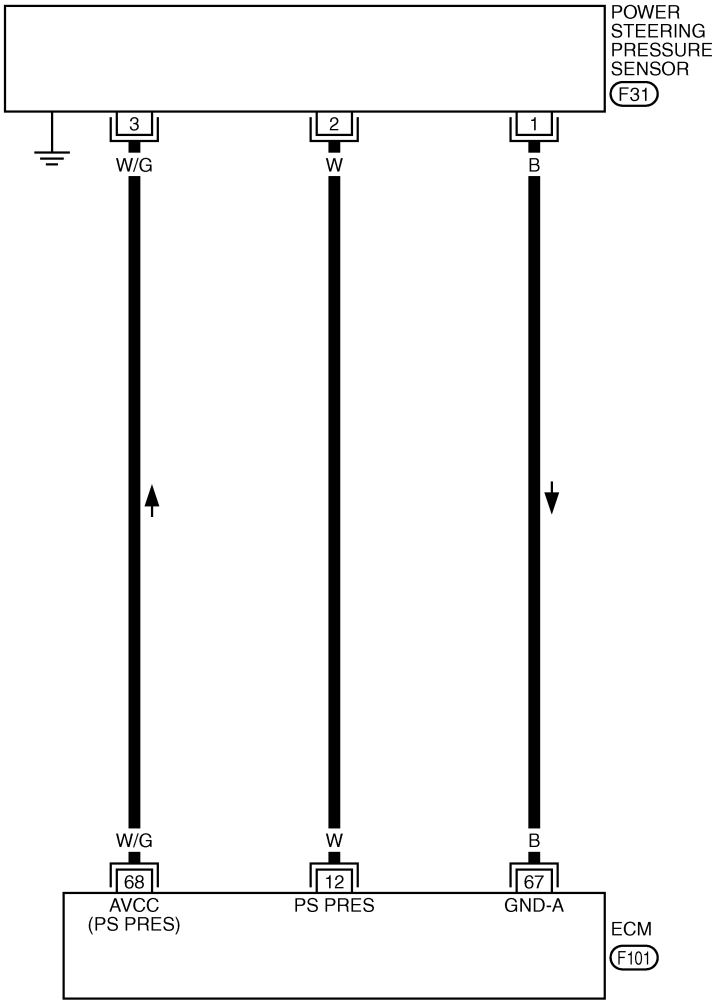

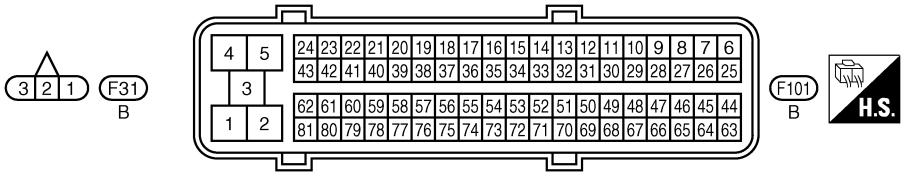

TBWA0707E

DTC P0605 ECM

PFP:23710

Component Description

ABS00GVQ

The ECM consists of a microcomputer and connectors for signal input and output and for power supply. The ECM controls the engine.

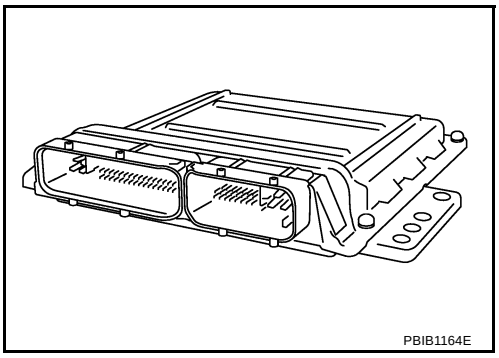

PBIB1164E

On Board Diagnosis Logic

ABS00GVR

This self-diagnosis has one or two trip detection logic.

DTC No.	Trouble diagnosis name	DTC detecting condition		Possible cause
P0605 0605	Engine control module	A)	ECM calculation function is malfunctioning.	● ECM
		B)	ECM EEP-ROM system is malfunctioning.	
		C)	ECM self shut-off function is malfunctioning.	

FAIL-SAFE MODE

ECM enters fail-safe mode when the malfunction A is detected.

Detected items	Engine operation condition in fail-safe mode
Malfunction A	● ECM stops the electric throttle control actuator control, throttle valve is maintained at a fixed opening (approx. 5 degrees) by the return spring. ● ECM deactivates ASCD operation.

DTC Confirmation Procedure

ABS00GVS

Perform PROCEDURE FOR MALFUNCTION A first. If the 1st trip DTC cannot be confirmed, perform PROCEDURE FOR MALFUNCTION B. If there is no malfunction on PROCEDURE FOR MALFUNCTION B, perform PROCEDURE FOR MALFUNCTION C.

NOTE:

If DTC Confirmation Procedure has been previously conducted, always turn ignition switch OFF and wait at least 10 seconds before conducting the next test.

PROCEDURE FOR MALFUNCTION A

With CONSULT-II

1. Turn ignition switch ON.
2. Select “DATA MONITOR” mode with CONSULT-II.
3. If 1st trip DTC is detected, check possible cause items.

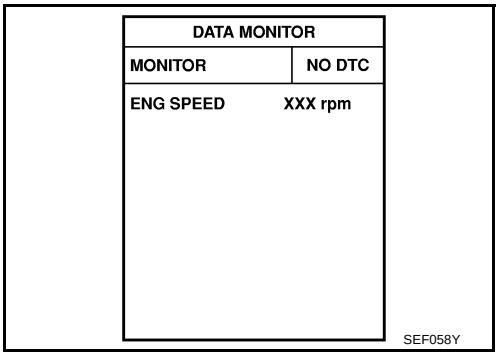

SEF058Y

Without CONSULT-II

1. Turn ignition switch ON.
2. Turn ignition switch OFF, wait at least 10 seconds and then turn ON.
3. Perform Diagnostic Test Mode II (Self-diagnostic results) with ECM.
4. If 1st trip DTC is detected, check possible cause items.

PROCEDURE FOR MALFUNCTION B

With CONSULT-II

1. Turn ignition switch ON and wait at least 1 second.
2. Select “DATA MONITOR” mode with CONSULT-II.
3. Turn ignition switch OFF, wait at least 10 seconds, and then turn ON.
4. If 1st trip DTC is detected, check possible cause items.

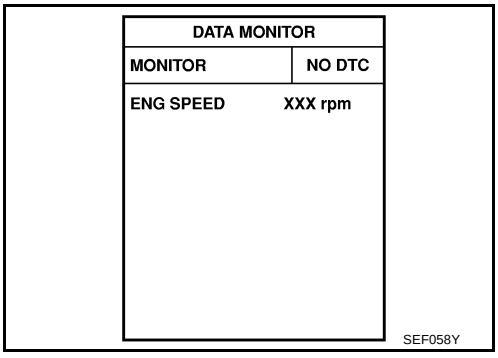

Without CONSULT-II

1. Turn ignition switch ON and wait at least 1 second.
2. Turn ignition switch OFF, wait at least 10 seconds and then turn ON.
3. Perform Diagnostic Test Mode II (Self-diagnostic results) with ECM.
4. If 1st trip DTC is detected, check possible cause items.

PROCEDURE FOR MALFUNCTION C

With CONSULT-II

1. Turn ignition switch ON and wait at least 1 second.
2. Select “DATA MONITOR” mode with CONSULT-II.
3. Turn ignition switch OFF, wait at least 10 seconds, and then turn ON.
4. Repeat step 3 for 32 times.
5. If 1st trip DTC is detected, check possible cause items.

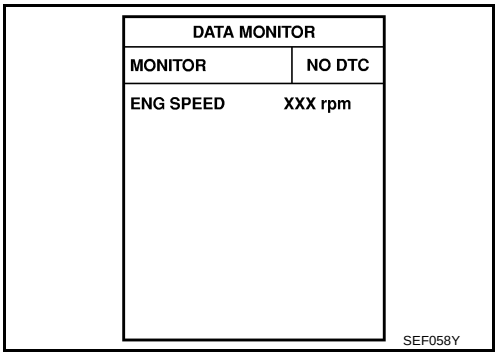

Without CONSULT-II

1. Turn ignition switch ON and wait at least 1 second.
2. Turn ignition switch OFF and wait at least 10 seconds.
3. Repeat step 1 to 2 for 32 times.
4. Turn ignition switch OFF, wait at least 10 seconds and then turn ON.
5. Perform Diagnostic Test Mode II (Self-diagnostic results) with ECM.
6. If 1st trip DTC is detected, check possible cause items.

DTC P1031, P1032, P1051, P1052 A/F SENSOR 1 HEATER

PFP:22693

Description

ABS00GVU

SYSTEM DESCRIPTION

Sensor	Input Signal to ECM	ECM function	Actuator
Camshaft position sensor (PHASE) Crankshaft position sensor (POS)	Engine speed	Air fuel ratio (A/F) sensor 1 heater control	Air fuel ratio (A/F) sensor 1 heater
Mass air flow sensor	Amount of intake air		

The ECM performs ON/OFF duty control of the A/F sensor 1 heater corresponding to the engine operating condition to keep the temperature of A/F sensor 1 element at the specified range.

CONSULT-II Reference Value in Data Monitor Mode

ABS00GVV

Specification data are reference values.

MONITOR ITEM	CONDITION	SPECIFICATION
A/F S1 HTR (B1) A/F S1 HTR (B2)	● Engine: After warming up, idle the engine	0 - 100%

On Board Diagnosis Logic

ABS00GVW

DTC No.	Trouble diagnosis name	DTC detecting condition	Possible cause
P1031 1031 (Bank 1)	Air fuel ratio (A/F) sensor 1 heater control circuit low input	The current amperage in the air fuel ratio (A/F) sensor 1 heater circuit is out of the normal range. (An excessively low voltage signal is sent to ECM through the air fuel ratio (A/F) sensor 1 heater.)	● Harness or connectors (The A/F sensor 1 heater circuit is open or shorted.) ● Air fuel ratio (A/F) sensor 1 heater
P1051 1051 (Bank 2)			
P1032 1032 (Bank 1)	Air fuel ratio (A/F) sensor 1 heater control circuit high input	The current amperage in the air fuel ratio (A/F) sensor 1 heater circuit is out of the normal range. (An excessively high voltage signal is sent to ECM through the air fuel ratio (A/F) sensor 1 heater.)	● Harness or connectors (The A/F sensor 1 heater circuit is shorted.) ● Air fuel ratio (A/F) sensor 1 heater
P1052 1052 (Bank 2)			

DTC Confirmation Procedure

ABS00GVX

NOTE:
If DTC Confirmation Procedure has been previously conducted, always turn ignition switch OFF and wait at least 10 seconds before conducting the next test.

TESTING CONDITION:
Before performing the following procedure, confirm that battery voltage is between 10.5V and 16V at idle.

WITH CONSULT-II

1. Turn ignition switch ON and select “DATA MONITOR” mode with CONSULT-II.
2. Start engine and let it idle for at least 10 seconds.
3. If 1st trip DTC is detected, check possible cause items.

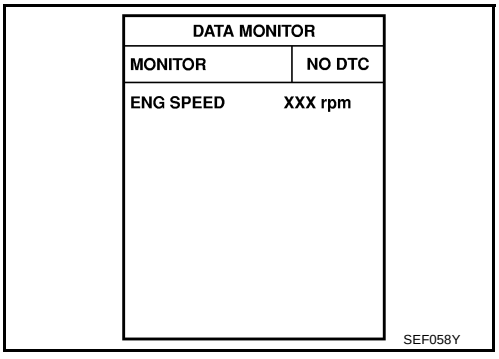

⊗ WITHOUT CONSULT-II

1. Start engine and let it idle for at least 10 seconds.
2. Turn ignition switch OFF, wait at least 10 seconds and then turn ON.
3. Perform Diagnostic Test Mode II (Self-diagnostic results) with ECM.
4. If 1st trip DTC is detected, check possible cause items.

Wiring Diagram

ABS00GVY

LHD MODELS

Bank 1

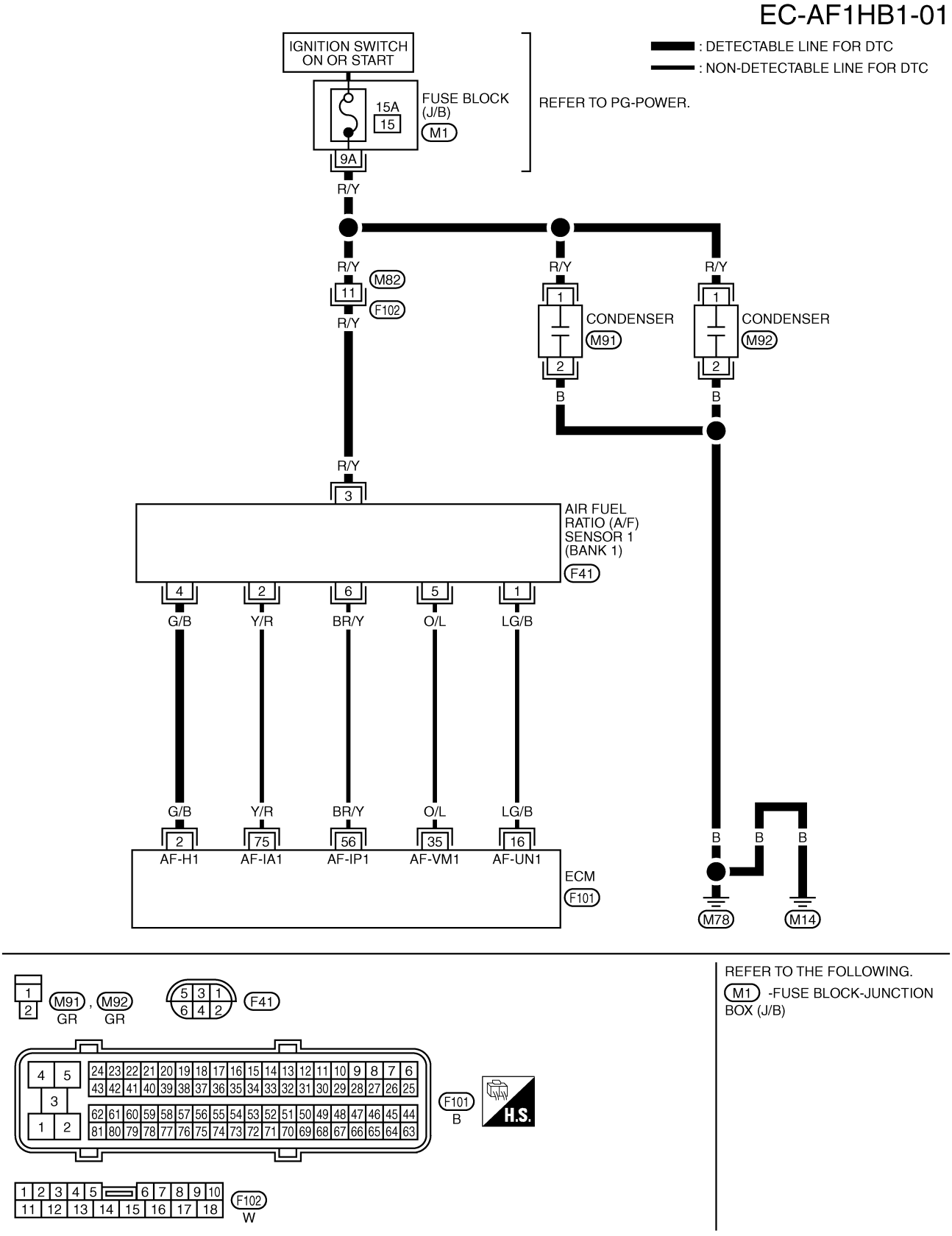

Bank 2

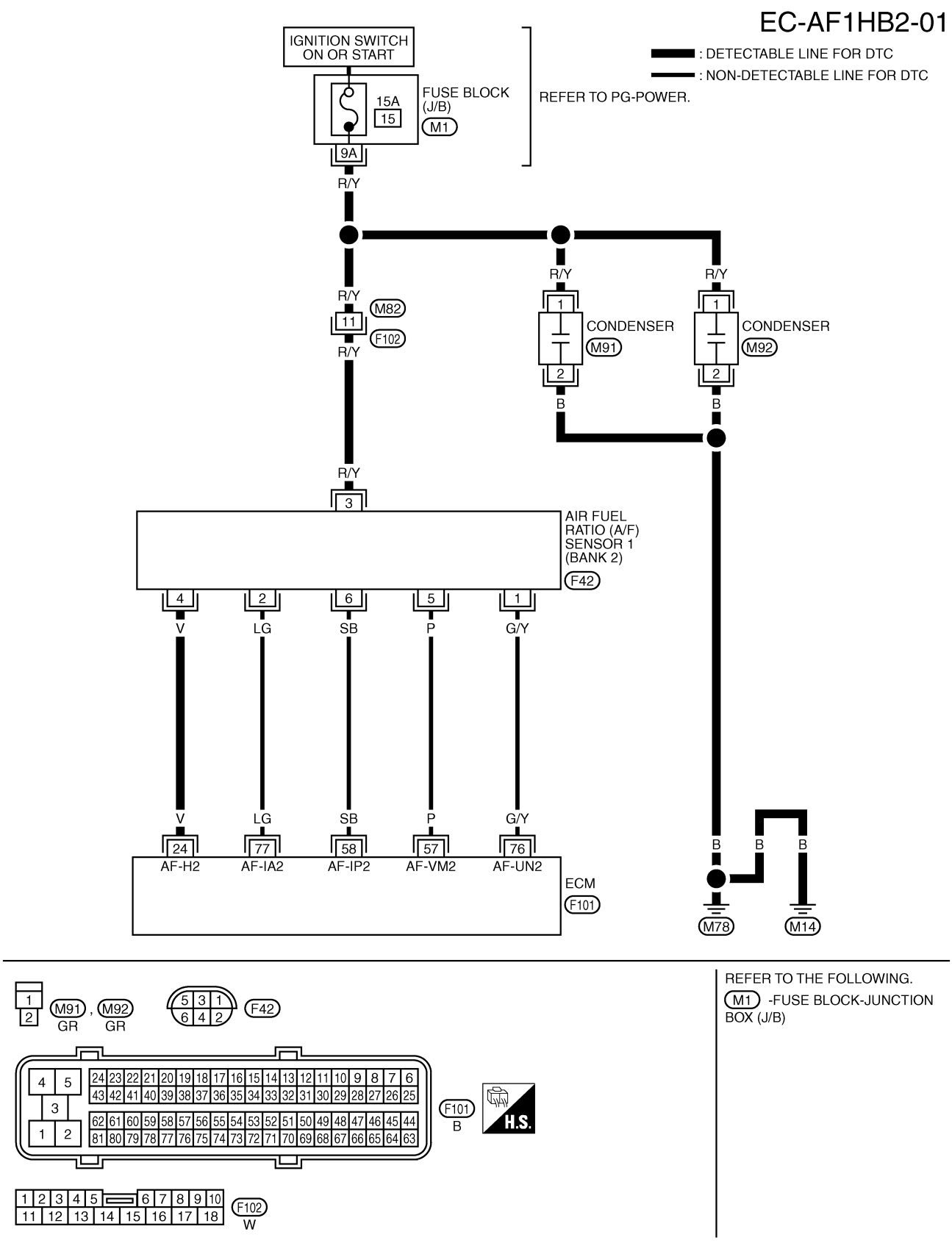
EC-AF1HB2-01
: DETECTABLE LINE FOR DTC
: NON-DETECTABLE LINE FOR DTC
REFER TO PG-POWER.
IGNITION SWITCH ON OR START
FUSE BLOCK (J/B)
M1
15A
15
9A
R/Y
M82
11
F102
CONDENSER
M91
M92
1
2
B
3
AIR FUEL RATIO (A/F) SENSOR 1 (BANK 2)
F42
4
2
6
5
1
V
LG
SB
P
G/Y
24
77
58
57
76
AF-H2
AF-IA2
AF-IP2
AF-VM2
AF-UN2
ECM
F101
M78
M14
GR
F101
B
H.S.
F102
W
REFER TO THE FOLLOWING.
M1 -FUSE BLOCK-JUNCTION BOX (J/B)
TBWA0686E

DTC P1065 ECM POWER SUPPLY

PFP:23710

Component Description

ABS00GW2

Battery voltage is supplied to the ECM even when the ignition switch is turned OFF for the ECM memory function of the DTC memory, the air-fuel ratio feedback compensation value memory, the idle air volume learning value memory, etc.

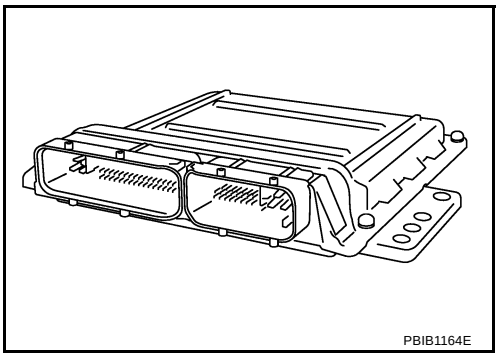

On Board Diagnosis Logic

ABS00GW3

DTC No.	Trouble diagnosis name	DTC detecting condition	Possible cause
P1065 1065	ECM power supply circuit	ECM back-up RAM system does not function properly.	● Harness or connectors [ECM power supply (back-up) circuit is open or shorted.] ● ECM

DTC Confirmation Procedure

ABS00GW4

NOTE:
If DTC Confirmation Procedure has been previously conducted, always turn ignition switch OFF and wait at least 10 seconds before conducting the next test.

WITH CONSULT-II

1. Turn ignition switch ON and wait at least 1 second.
2. Select “DATA MONITOR” mode with CONSULT-II.
3. Start engine and let it idle for 1 second.
4. Turn ignition switch OFF, wait at least 10 seconds, and then turn ON.
5. Repeat steps 3 and 4 for 4 times.
6. If 1st trip DTC is detected, check possible cause items.

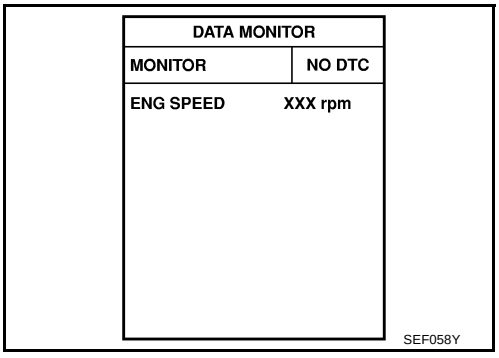

WITHOUT CONSULT-II

1. Turn ignition switch ON and wait at least 1 second.
2. Start engine and let it idle for 1 second.
3. Turn ignition switch OFF, wait at least 10 seconds, and then turn ON.
4. Repeat steps 2 to 3 for 4 times.
5. Turn ignition switch OFF, wait at least 10 seconds and then turn ON.
6. Perform Diagnostic Test Mode II (Self-diagnostic results) with ECM.
7. If 1st trip DTC is detected, check possible cause items.

Wiring Diagram
LHD MODELS

ABS00GW5

EC-ECM/PW-01

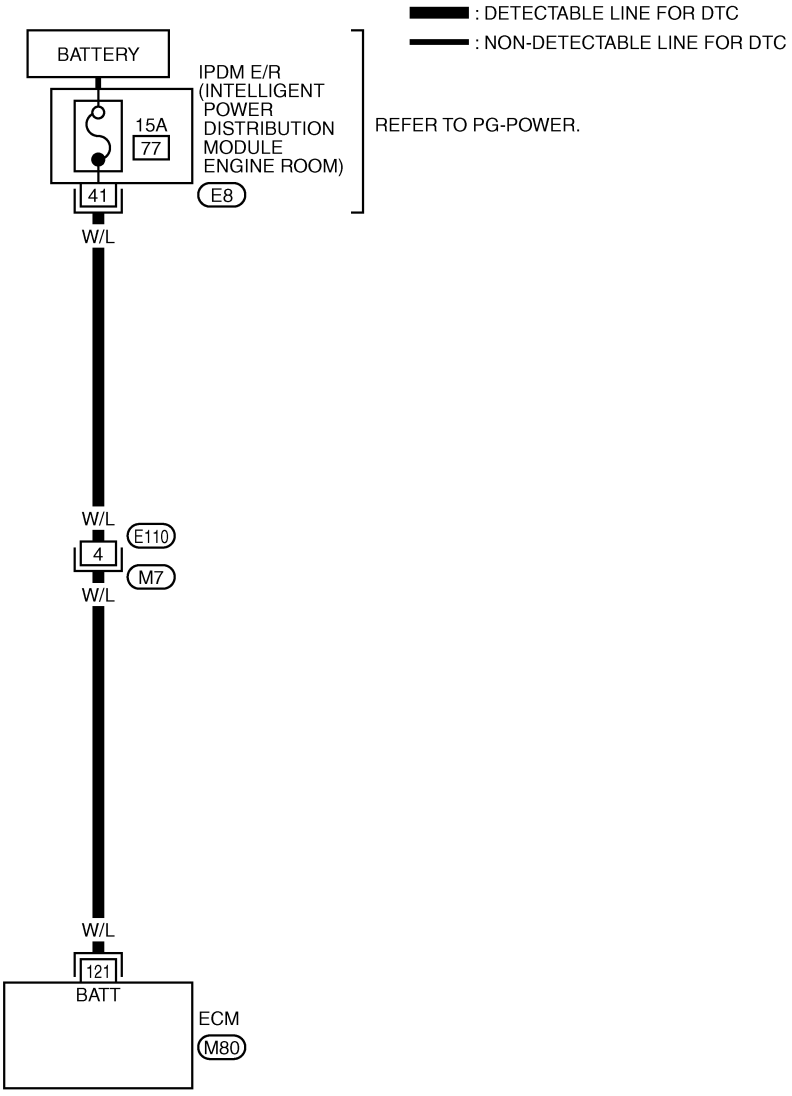

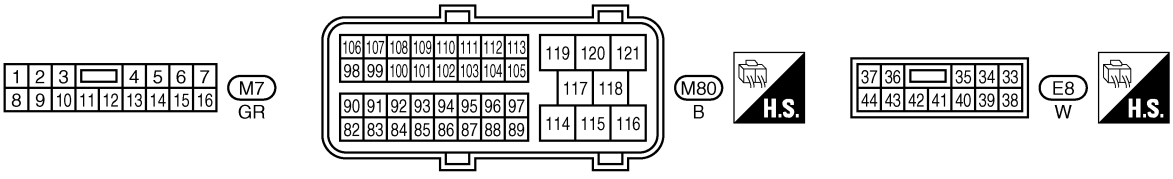

TBWB0607E

DTC P1111, P1136 IVT CONTROL SOLENOID VALVE

PFP:23796

Component Description

ABS00GW7

Intake valve timing control solenoid valve is activated by ON/OFF pulse duty (ratio) signals from the ECM.
The intake valve timing control solenoid valve changes the oil amount and direction of flow through intake valve timing control unit or stops oil flow.
The longer pulse width advances valve angle.
The shorter pulse width retards valve angle.
When ON and OFF pulse widths become equal, the solenoid valve stops oil pressure flow to fix the intake valve angle at the control position.

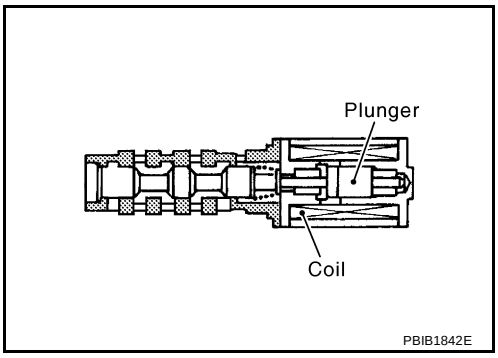

CONSULT-II Reference Value in Data Monitor Mode

ABS00GW8

Specification data are reference values.

MONITOR ITEM	CONDITION		SPECIFICATION
INT/V SOL (B1) INT/V SOL (B2)	● Engine: After warming up ● Shift lever: P or N ● Air conditioner switch: OFF ● No load	Idle	0% - 2%
		2,000 rpm	Approx. 0% - 50%

On Board Diagnosis Logic

ABS00GW9

DTC No.	Trouble diagnosis name	DTC detecting condition	Possible cause
P1111 1111 (Bank 1)	Intake valve timing control solenoid valve circuit	An improper voltage is sent to the ECM through intake valve timing control solenoid valve.	● Harness or connectors (Intake valve timing control solenoid valve circuit is open or shorted.) ● Intake valve timing control solenoid valve
P1136 1136 (Bank 2)			

DTC Confirmation Procedure

ABS00GWA

NOTE:
If DTC Confirmation Procedure has been previously conducted, always turn ignition switch OFF and wait at least 10 seconds before conducting the next test.

WITH CONSULT-II

1. Turn ignition switch ON.
2. Select “DATA MONITOR” mode with CONSULT-II.
3. Start engine and let it idle for 5 seconds.
4. If 1st trip DTC is detected, check possible cause items.

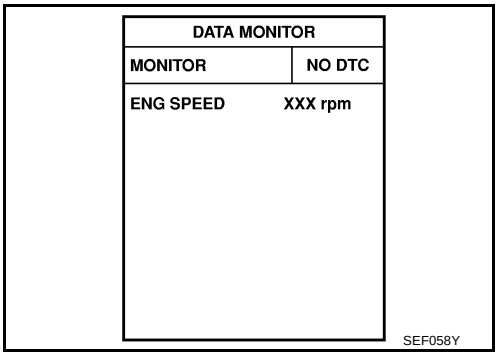

WITHOUT CONSULT-II

1. Start engine and let it idle for 5 seconds.
2. Turn ignition switch OFF, wait at least 10 seconds and then turn ON.
3. Perform Diagnostic Test Mode II (Self-diagnostic results) with ECM.
4. If 1st trip DTC is detected, check possible cause items.

Wiring Diagram
LHD MODELS
Bank 1

ABS00GWB

EC-IVCB1-01

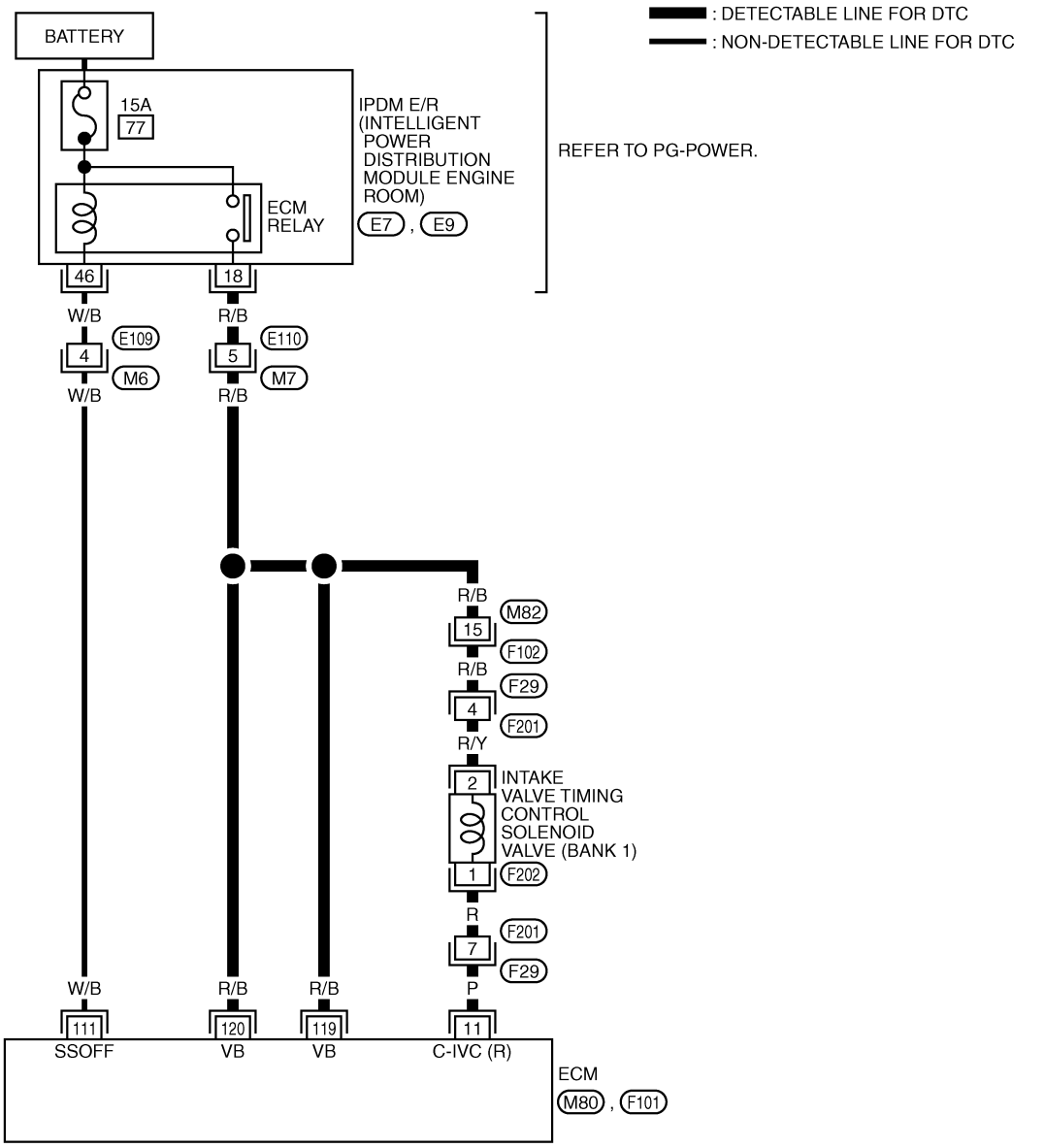

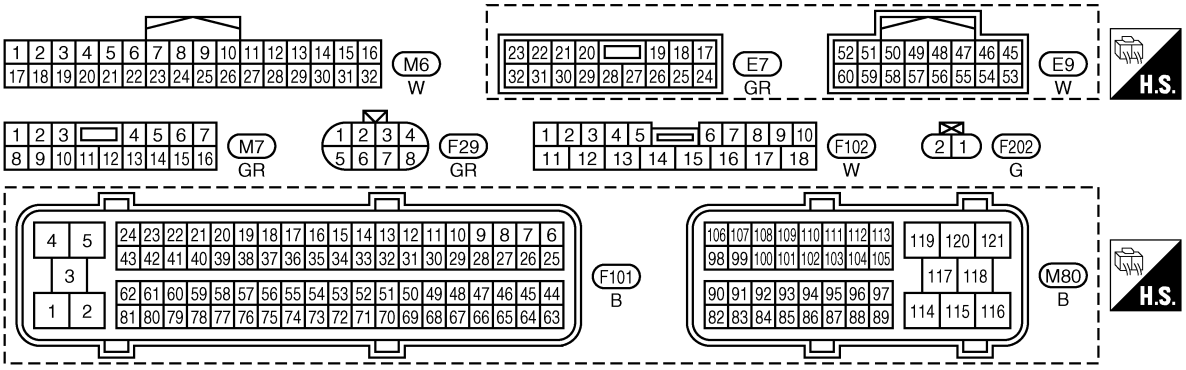

TBWB0511E

Bank 2

EC-IVCB2-01

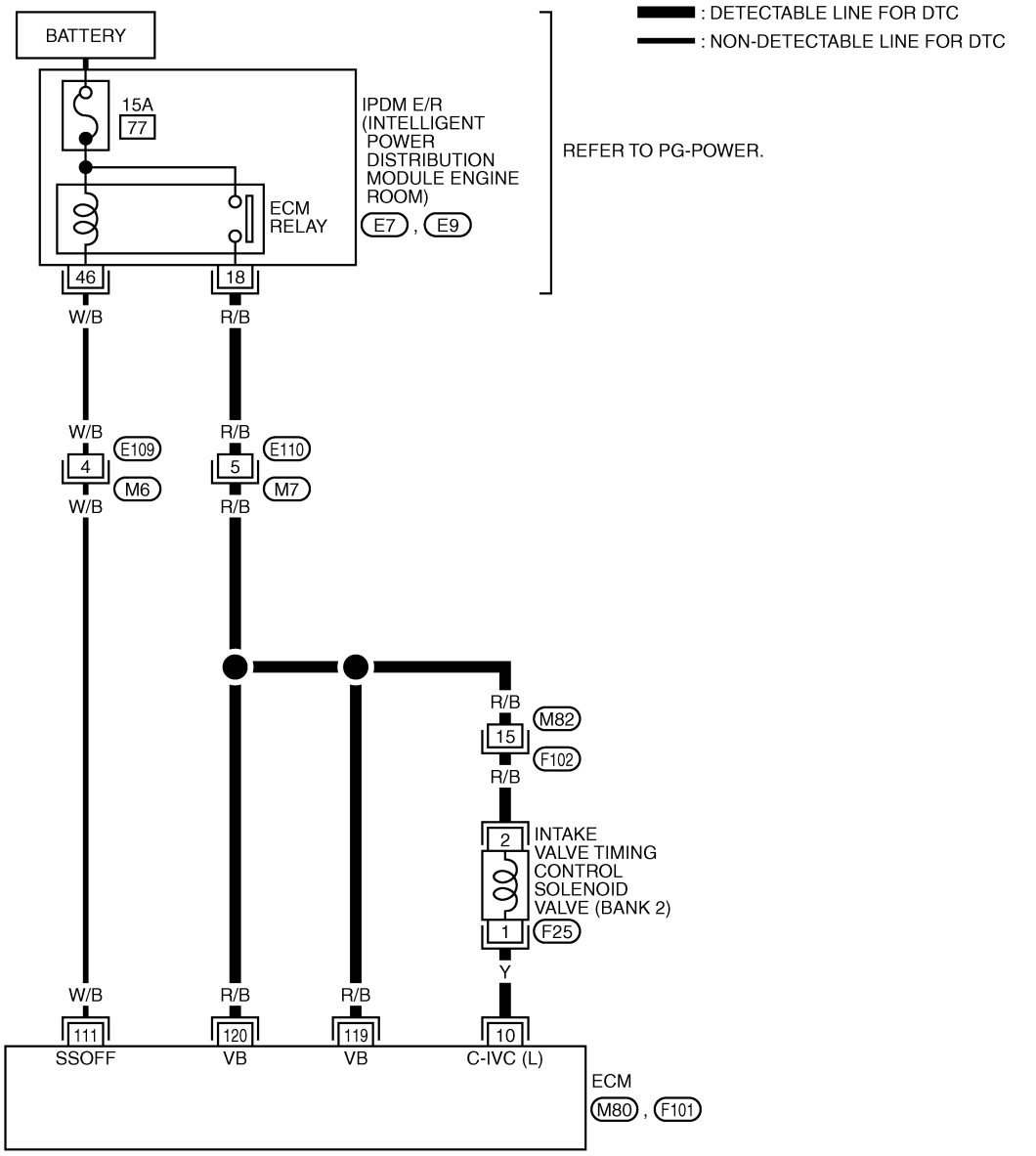

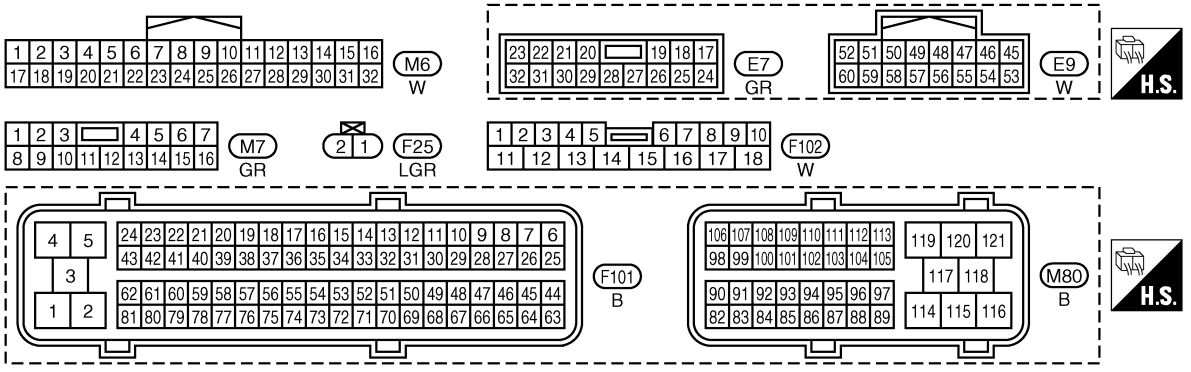

TBWB0513E

DTC P1121 ELECTRIC THROTTLE CONTROL ACTUATOR

PFP:16119

Component Description

ABS00GWF

Electric throttle control actuator consists of throttle control motor, throttle position sensor, etc.
The throttle control motor is operated by the ECM and it opens and closes the throttle valve.
The throttle position sensor detects the throttle valve position, and the opening and closing speed of the throttle valve and feeds the voltage signals to the ECM. The ECM judges the current opening angle of the throttle valve from these signals and the ECM controls the throttle control motor to make the throttle valve opening angle properly in response to driving condition.

On Board Diagnosis Logic

ABS00GWG

This self-diagnosis has the one trip detection logic.

DTC No.	Trouble diagnosis name	DTC detecting condition		Possible cause
P1121 1121	Electric throttle control actuator	A)	Electric throttle control actuator does not function properly due to the return spring malfunction.	● Electric throttle control actuator
		B)	Throttle valve opening angle in fail-safe mode is not in specified range.	
		C)	ECM detects the throttle valve is stuck open.	

FAIL-SAFE MODE

When the malfunction is detected, the ECM enters fail-safe mode and the MIL lights up.

Detected items	Engine operating condition in fail-safe mode
Malfunction A	ECM controls the electric throttle actuator by regulating the throttle opening around the idle position. The engine speed will not rise more than 2,000 rpm.
Malfunction B	ECM controls the electric throttle control actuator by regulating the throttle opening to 20 degrees or less.
Malfunction C	While the vehicle is driving, it slows down gradually by fuel cut. After the vehicle stops, the engine stalls. The engine can restart in N or P position, and engine speed will not exceed 1,000 rpm or more.

DTC Confirmation Procedure

ABS00GWH

NOTE:

- **Perform PROCEDURE FOR MALFUNCTION A AND B first. If the DTC cannot be confirmed, perform PROCEDURE FOR MALFUNCTION C.**
- If DTC Confirmation Procedure has been previously conducted, always turn ignition switch OFF and wait at least 10 seconds before conducting the next test.

PROCEDURE FOR MALFUNCTION A AND B

With CONSULT-II

1. Turn ignition switch ON and wait at least 1 second.
2. Select “DATA MONITOR” mode with CONSULT-II.
3. Shift selector lever to D position and wait at least 3 seconds.
4. Shift selector lever to P or N position.
5. Turn ignition switch OFF and wait at least 10 seconds.
6. Turn ignition switch ON and wait at least 1 second.
7. Shift selector lever to D position and wait at least 3 seconds.
8. Shift selector lever to P or N position.
9. Turn ignition switch OFF, wait at least 10 seconds, and then turn ON.
10. If DTC is detected, check possible cause items.

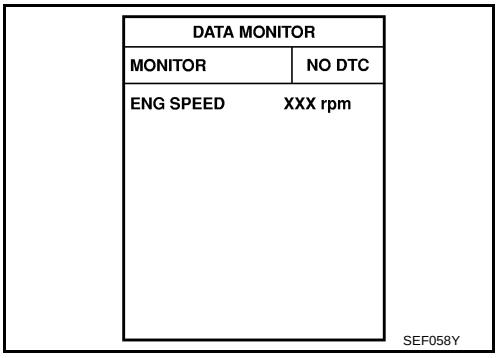

Without CONSULT-II

1. Turn ignition witch ON and wait at least 1 second.
2. Shift selector lever to D position and wait at least 3 seconds.
3. Shift selector lever to P or N position.
4. Turn ignition switch OFF and wait at least 10 seconds.
5. Turn ignition switch ON and wait at least 1 second.
6. Shift selector lever to D position and wait at least 3 seconds.
7. Shift selector lever to P or N position.
8. Turn ignition switch OFF, wait at least 10 seconds and then turn ON.
9. Perform Diagnostic Test Mode II (Self-diagnostic results) with ECM.
10. If DTC is detected, check possible cause items.

PROCEDURE FOR MALFUNCTION C

With CONSULT-II

1. Turn ignition switch ON and wait at least 1 second.
2. Select “DATA MONITOR” mode with CONSULT-II.
3. Shift selector lever to D position and wait at least 3 seconds.
4. Shift selector lever to P or N position.
5. Start engine and let it idle for 3 seconds.
6. If DTC is detected, check possible cause items.

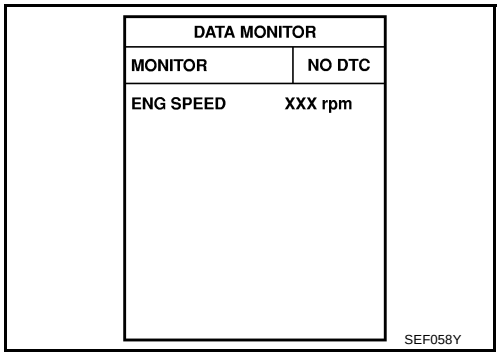

Without CONSULT-II

1. Turn ignition witch ON and wait at least 1 second.
2. Shift selector lever to D position and wait at least 3 seconds.
3. Shift selector lever to N or P position.
4. Start engine and let it idle for 3 seconds.
5. Turn ignition switch OFF, wait at least 10 seconds and then turn ON.
6. Perform Diagnostic Test Mode II (Self-diagnostic results) with ECM.
7. If DTC is detected, check possible cause items.

DTC P1122 ELECTRIC THROTTLE CONTROL FUNCTION

PFP:16119

Description

ABS00GWJ

NOTE:
If DTC P1122 is displayed with DTC P1121 or 1126, first perform the trouble diagnosis for DTC P1121 or P1126. Refer to EC-411 or EC-416 .

Electric throttle control actuator consists of throttle control motor, throttle position sensor, etc.
The throttle control motor is operated by the ECM and it opens and closes the throttle valve.
The current opening angle of the throttle valve is detected by the throttle position sensor and it provides feedback to the ECM to control the throttle control motor to make the throttle valve opening angle properly in response to driving condition.

On Board Diagnosis Logic

ABS00GWK

This self-diagnosis has the one trip detection logic.

DTC No.	Trouble diagnosis name	DTC detecting condition	Possible cause
P1122 1122	Electric throttle control performance problem	Electric throttle control function does not operate properly.	● Harness or connectors (Throttle control motor circuit is open or shorted) ● Electric throttle control actuator

FAIL-SAFE MODE

When the malfunction is detected, ECM enters fail-safe mode and the MIL lights up.

Engine operating condition in fail-safe mode
ECM stops the electric throttle control actuator control, throttle valve is maintained at a fixed opening (approx. 5 degrees) by the return spring.

DTC Confirmation Procedure

ABS00GWL

TESTING CONDITION:

- **Before performing the following procedure, confirm that battery voltage is more than 11V at idle.**

NOTE:
If DTC Confirmation Procedure has been previously conducted, always turn ignition switch OFF and wait at least 10 seconds before conducting the next test.

WITH CONSULT-II

1. Turn ignition switch ON and wait at least 2 seconds.
2. Select “DATA MONITOR” mode with CONSULT-II.
3. Start engine and let it idle for 5 seconds.
4. If DTC is detected, check possible cause items.

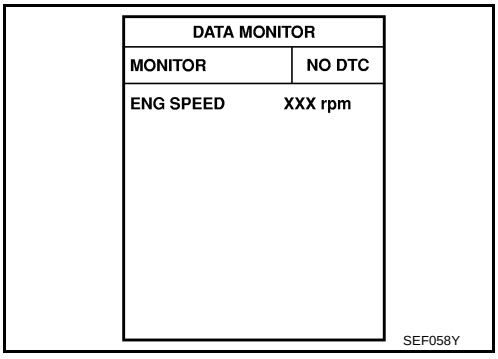

WITHOUT CONSULT-II

1. Turn ignition switch ON and wait at least 2 seconds.
2. Start engine and let it idle for 5 seconds.
3. Turn ignition switch OFF, wait at least 10 seconds and then turn ON.
4. Perform Diagnostic Test Mode II (Self-diagnostic results) with ECM.
5. If DTC is detected, check possible cause items.

Wiring Diagram
LHD MODELS

ABS00GWM

EC-ETC1-01

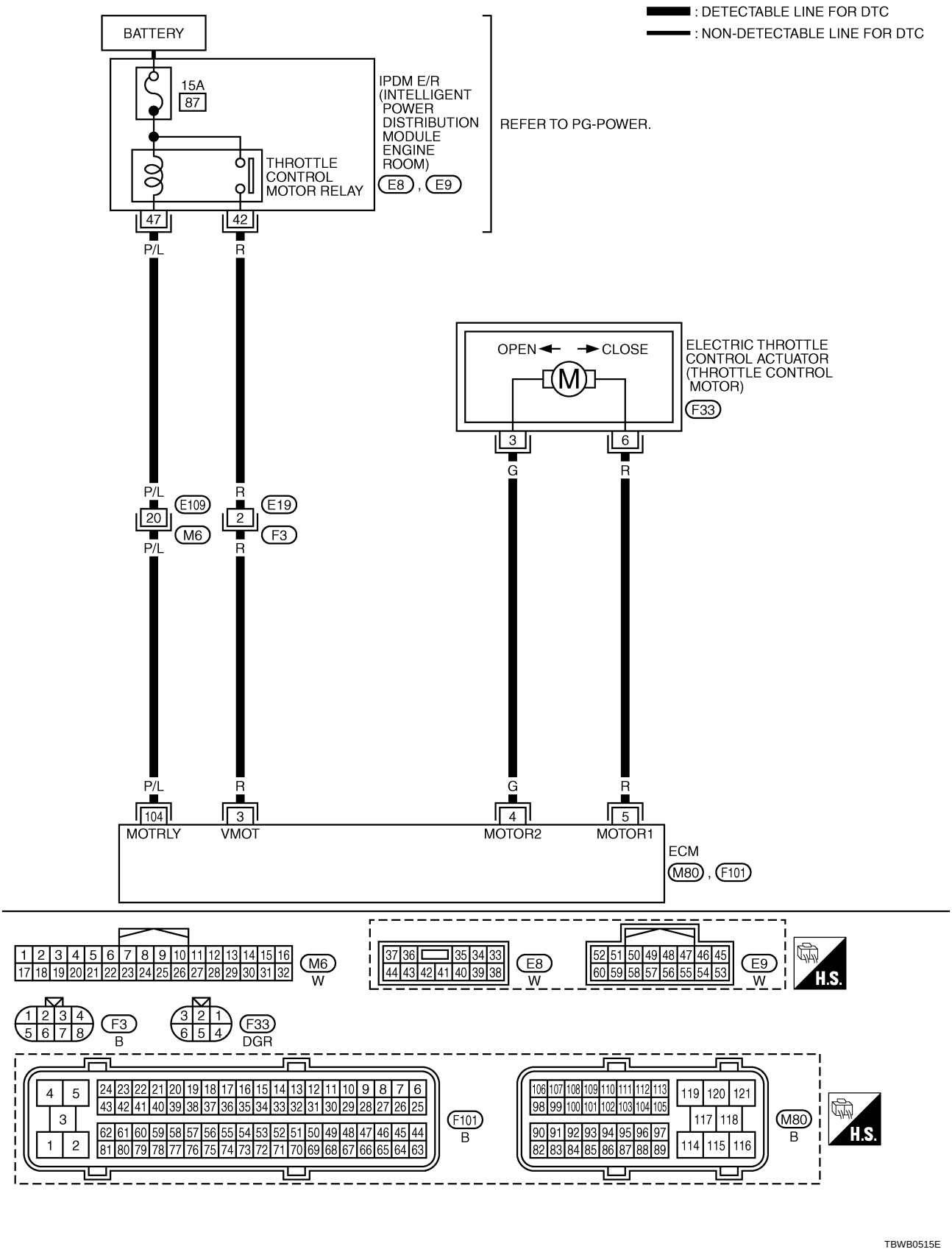

DTC P1124, P1126 THROTTLE CONTROL MOTOR RELAY

PFP:16119

Component Description

ABS00GWQ

Power supply for the throttle control motor is provided to the ECM via throttle control motor relay. The throttle control motor relay is ON/OFF controlled by the ECM. When the ignition switch is turned ON, the ECM sends an ON signal to throttle control motor relay and battery voltage is provided to the ECM. When the ignition switch is turned OFF, the ECM sends an OFF signal to throttle control motor relay and battery voltage is not provided to the ECM.

CONSULT-II Reference Value in Data Monitor Mode

ABS00GWR

Specification data are reference values.

MONITOR ITEM	CONDITION	SPECIFICATION
THRTL RELAY	● Ignition switch: ON	ON

On Board Diagnosis Logic

ABS00GWS

These self-diagnoses have the one trip detection logic.

DTC No.	Trouble diagnosis name	DTC detecting condition	Possible cause
P1124 1124	Throttle control motor relay circuit short	ECM detects the throttle control motor relay is stuck ON.	● Harness or connectors (Throttle control motor relay circuit is shorted) ● Throttle control motor relay
P1126 1126	Throttle control motor relay circuit open	ECM detects a voltage of power source for throttle control motor is excessively low.	● Harness or connectors (Throttle control motor relay circuit is open) ● Throttle control motor relay

FAIL-SAFE MODE

When the malfunction is detected, ECM enters fail-safe mode and the MIL lights up.

Engine operating condition in fail-safe mode
ECM stops the electric throttle control actuator control, throttle valve is maintained at a fixed opening (approx. 5 degrees) by the return spring.

DTC Confirmation Procedure

ABS00GWT

NOTE:
If DTC Confirmation Procedure has been previously conducted, always turn ignition switch OFF and wait at least 10 seconds before conducting the next test.

PROCEDURE FOR DTC P1124

TESTING CONDITION:
Before performing the following procedure, confirm that battery voltage is more than 8V.

With CONSULT-II

1. Turn ignition switch ON and wait at least 1 second.
2. Select “DATA MONITOR” mode with CONSULT-II.
3. If DTC is detected, check possible cause items.

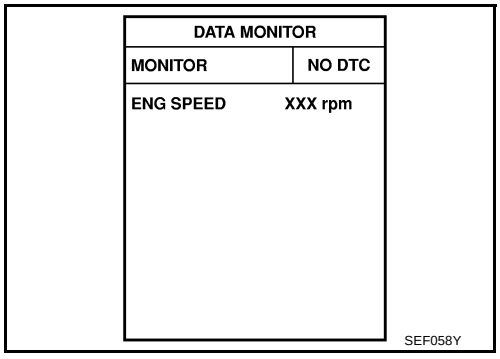

Without CONSULT-II

1. Turn ignition switch ON and wait at least 1 second.
2. Turn ignition switch OFF, wait at least 10 seconds and then turn ON.
3. Perform Diagnostic Test Mode II (Self-diagnostic results) with ECM.
4. If DTC is detected, check possible cause items.

PROCEDURE FOR DTC P1126

With CONSULT-II

1. Turn ignition switch ON and wait at least 2 seconds.
2. Select “DATA MONITOR” mode with CONSULT-II.
3. Start engine and let it idle for 5 seconds.
4. If DTC is detected, check possible cause items.

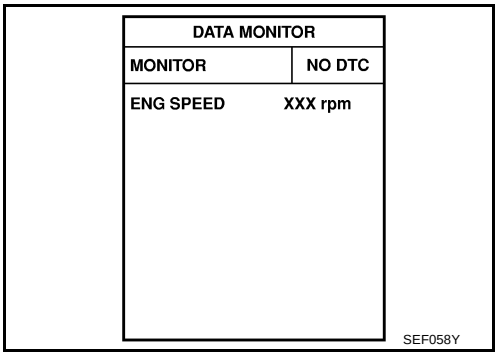

Without CONSULT-II

1. Turn ignition switch ON and wait at least 2 seconds.
2. Start engine and let it idle for 5 seconds.
3. Turn ignition switch OFF, wait at least 10 seconds and then turn ON.
4. Perform Diagnostic Test Mode II (Self-diagnostic results) with ECM.
5. If DTC is detected, check possible cause items.

Wiring Diagram
LHD MODELS

ABS00GWU

EC-ETC2-01

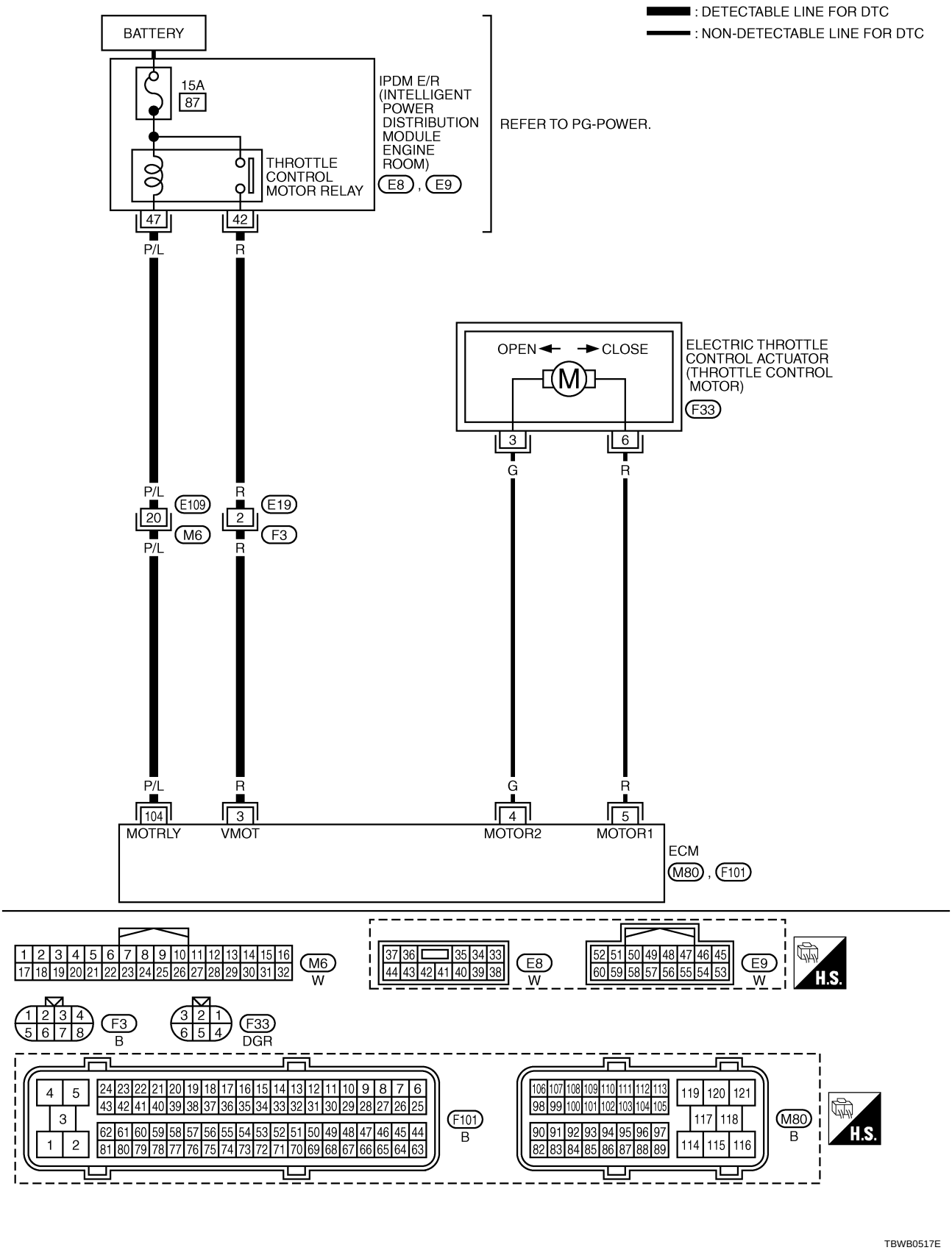

DTC P1128 THROTTLE CONTROL MOTOR

PFP:16119

Component Description

ABS00GWW

The throttle control motor is operated by the ECM and it opens and closes the throttle valve.
The current opening angle of the throttle valve is detected by the throttle position sensor and it provides feedback to the ECM to control the throttle control motor to make the throttle valve opening angle properly in response to driving condition.

On Board Diagnosis Logic

ABS00GWX

This self-diagnosis has the one trip detection logic.

DTC No.	Trouble diagnosis name	DTC detecting condition	Possible cause
P1128 1128	Throttle control motor circuit short	ECM detects short in both circuits between ECM and throttle control motor.	● Harness or connectors (Throttle control motor circuit is shorted.) ● Electric throttle control actuator (Throttle control motor)

FAIL-SAFE MODE

When the malfunction is detected, the ECM enters fail-safe mode and the MIL lights up.

Engine operating condition in fail-safe mode
ECM stops the electric throttle control actuator control, throttle valve is maintained at a fixed opening (approx. 5 degrees) by the return spring.

DTC Confirmation Procedure

ABS00GWY

NOTE:
If DTC Confirmation Procedure has been previously conducted, always turn ignition switch OFF and wait at least 10 seconds before conducting the next test.

WITH CONSULT-II

1. Turn ignition switch ON and wait at least 2 seconds.
2. Select “DATA MONITOR” mode with CONSULT-II.
3. Start engine and let it idle for 5 seconds.
4. If DTC is detected, check possible cause items.

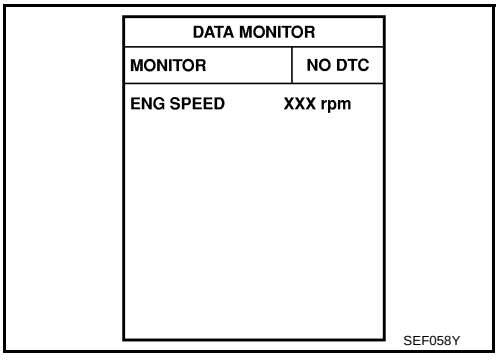

WITHOUT CONSULT-II

1. Turn ignition switch ON and wait at least 2 seconds.
2. Start engine and let it idle for 5 seconds.
3. Turn ignition switch OFF, wait at least 10 seconds and then turn ON.
4. Perform Diagnostic Test Mode II (Self-diagnostic results) with ECM.
5. If DTC is detected, check possible cause items.

Wiring Diagram
LHD MODELS

ABS00GWZ

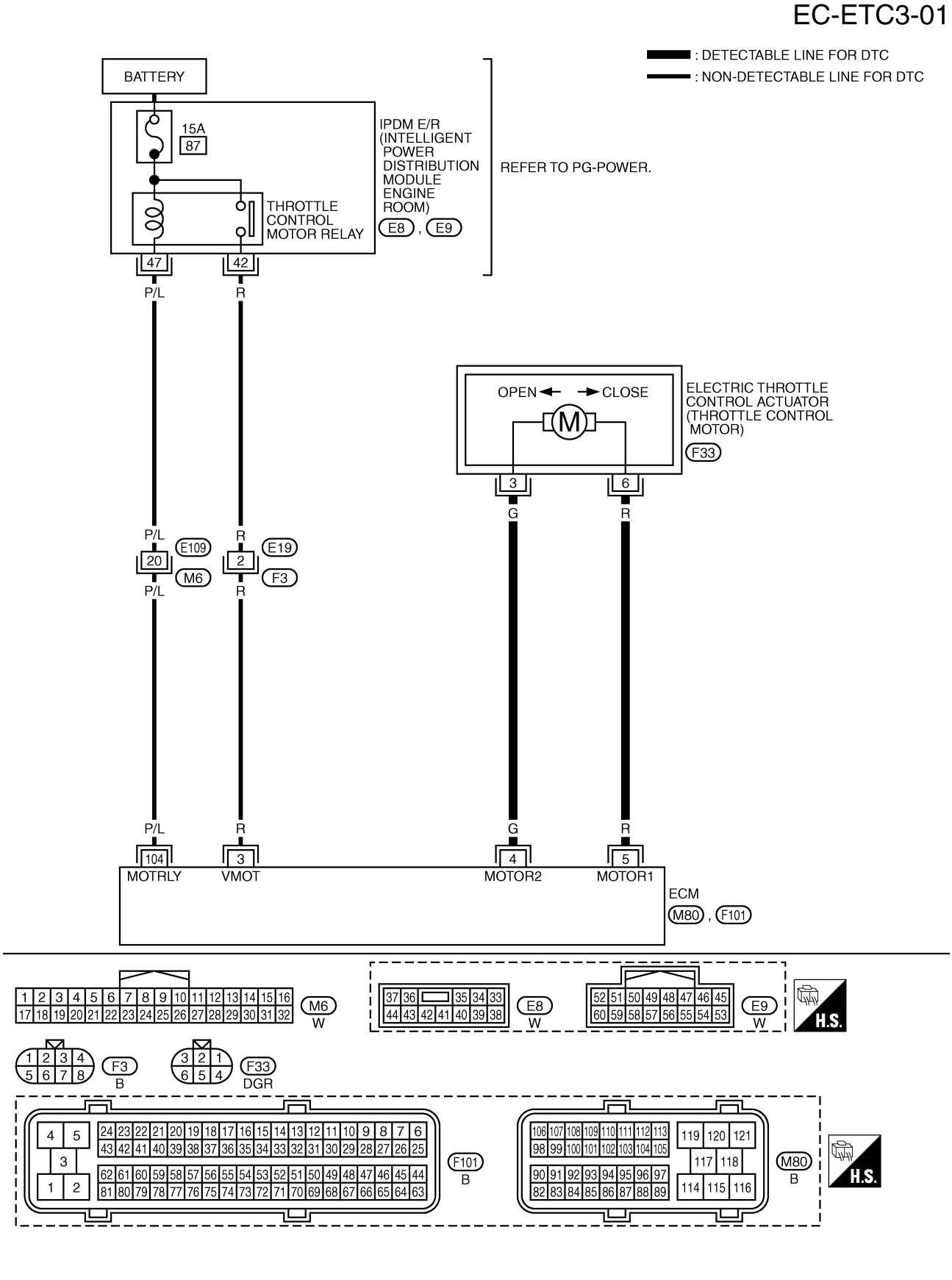

TBWB0519E

DTC P1211 TCS CONTROL UNIT

PFP:47850

Description

ABS00H2V

The malfunction information related to TCS is transferred through the CAN communication line from ABS actuator and electric unit (control unit) to ECM.
Be sure to erase the malfunction information such as DTC not only for "ABS actuator and electric unit (control unit)" but also for ECM after TCS related repair.

On Board Diagnosis Logic

ABS00H2W

Freeze frame data is not stored in the ECM for this self-diagnosis. The MIL will not light up for this self-diagnosis.

DTC No.	Trouble diagnosis name	DTC detecting condition	Possible cause
P1211 1211	TCS control unit	ECM receives a malfunction information from "ABS actuator and electric unit (control unit)".	● ABS actuator and electric unit (control unit) (Refer to BRC-5, "TROUBLE DIAGNOSIS" or BRC-25, "TROUBLE DIAGNOSIS") ● TCS related parts

DTC Confirmation Procedure

ABS00H2X

TESTING CONDITION:
Before performing the following procedure, confirm that battery voltage is more than 10.5V at idle.

WITH CONSULT-II

1. Turn ignition switch ON.
2. Select "DATA MONITOR" mode with CONSULT-II.
3. Start engine and let it idle for at least 60 seconds.
4. If 1st trip DTC is detected, check possible cause items.

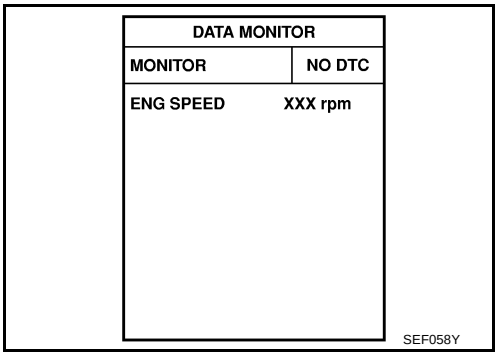

WITHOUT CONSULT-II

1. Start engine and let it idle for at least 60 seconds.
2. Turn ignition switch OFF, wait at least 10 seconds and then turn ON.
3. Perform Diagnostic Test Mode II (Self-diagnostic results) with ECM.
4. If 1st trip DTC is detected, check possible cause items.

DTC P1212 TCS COMMUNICATION LINE

PFP:47850

Description

ABS00H2Z

NOTE:
If DTC P1212 is displayed with DTC U1000 or U1001, first perform the trouble diagnosis for DTC U1000, U1001. Refer to EC-352, "DTC U1000, U1001 CAN COMMUNICATION LINE" .
This CAN communication line is used to control the smooth engine operation during the TCS operation. Pulse signals are exchanged between ECM and ABS actuator and electric unit (control unit).
Be sure to erase the malfunction information such as DTC not only for "ABS actuator and electric unit (control unit)" but also for ECM after TCS related repair.

On Board Diagnosis Logic

ABS00H30

Freeze frame data is not stored in the ECM for this self-diagnosis. The MIL will not light up for this self-diagnosis.

DTC No.	Trouble diagnosis name	DTC detecting condition	Possible cause
P1212 1212	TCS communication line	ECM can not receive the information from "ABS actuator and electric unit (control unit)" continuously.	● Harness or connectors (The CAN communication line is open or shorted.) (Refer to LAN-3, "Precautions When Using CONSULT-II") ● ABS actuator and electric unit (control unit) (Refer to BRC-5, "TROUBLE DIAGNOSIS" or BRC-25, "TROUBLE DIAGNOSIS") ● Dead (Weak) battery

DTC Confirmation Procedure

ABS00H31

TESTING CONDITION:
Before performing the following procedure, confirm that battery voltage is more than 10.5V at idle.

WITH CONSULT-II

1. Turn ignition switch ON.
2. Select "DATA MONITOR" mode with CONSULT-II.
3. Start engine and let it idle for at least 10 seconds.
4. If 1st trip DTC is detected, check possible cause items.

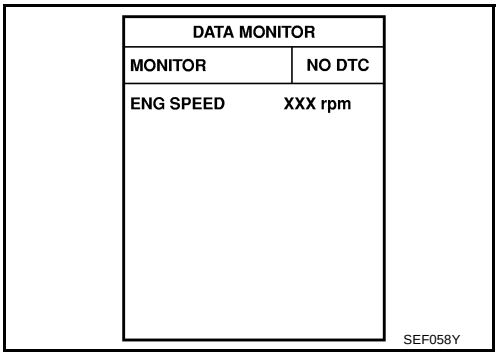

WITHOUT CONSULT-II

1. Start engine and let it idle for at least 10 seconds.
2. Turn ignition switch OFF, wait at least 10 seconds and then turn ON.
3. Perform Diagnostic Test Mode II (Self-diagnostic results) with ECM.
4. If 1st trip DTC is detected, check possible cause items.

DTC P1217 ENGINE OVER TEMPERATURE

PFP:00000

Description

ABS00GX3

SYSTEM DESCRIPTION

NOTE:
If DTC P1217 is displayed with DTC U1000 or U1001, first perform the trouble diagnosis for DTC U1000, U1001. Refer to EC-352, "DTC U1000, U1001 CAN COMMUNICATION LINE" .

Cooling Fan Control

Sensor	Input Signal to ECM	ECM function	Actuator
Crankshaft position sensor (POS) Camshaft position sensor (PHASE)	Engine speed*1	Cooling fan control	IPDM E/R (Cooling fan relay)
Battery	Battery voltage*1		
Wheel sensor*2	Vehicle speed		
Engine coolant temperature sensor	Engine coolant temperature		
Air conditioner switch*2	Air conditioner ON signal		
Refrigerant pressure sensor	Refrigerant pressure		

*1: The ECM determines the start signal status by the signals of engine speed and battery voltage.
*2: This signals is sent to ECM through CAN communication line.

The ECM controls the cooling fan corresponding to the vehicle speed, engine coolant temperature, refrigerant pressure, and air conditioner ON signal. The control system has 3-step control [HIGH/LOW/OFF].

Cooling Fan Operation

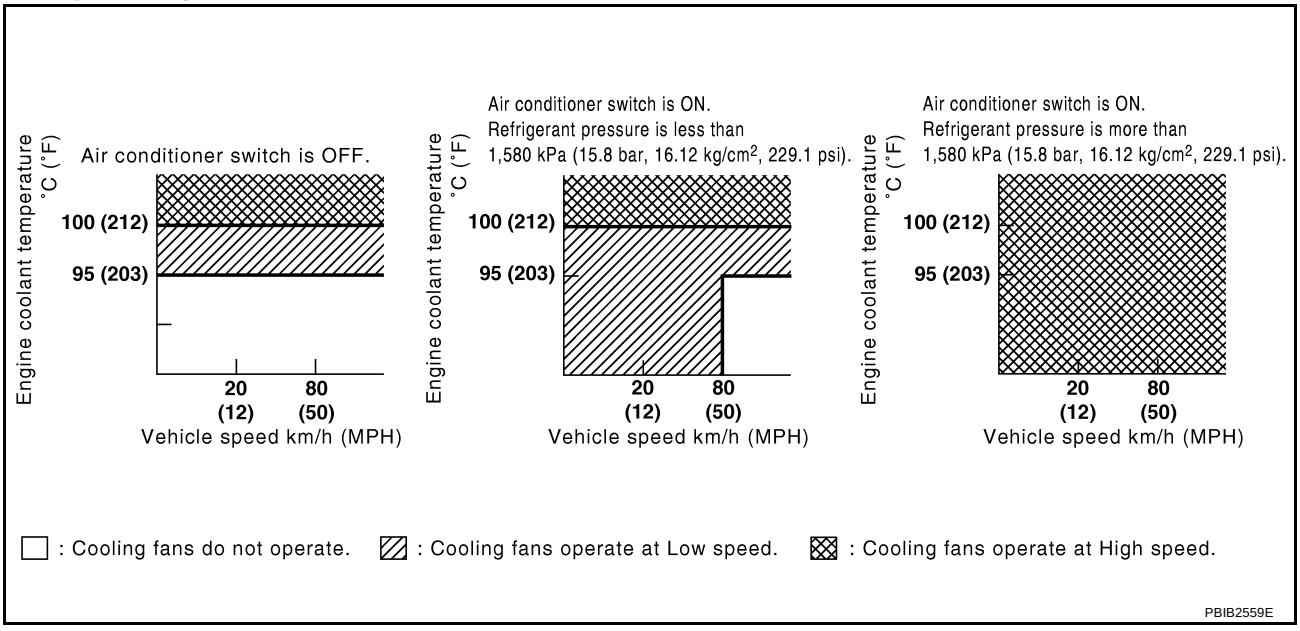

Cooling Fan Relay Operation

The ECM controls cooling fan relays in the IPDM E/R through CAN communication line.

Cooling fan speed	Cooling fan relay		
	1	2	3
Stop (OFF)	OFF	OFF	OFF
Low (LOW)	OFF	OFF	ON
High (HI)	ON	ON	ON

COMPONENT DESCRIPTION

Cooling Fan Motor

The cooling fan operates at each speed when the current flows in the cooling fan motor as follows.

Cooling fan speed	Cooling fan motor terminals	
	(+)	(–)
Low (LOW)	1	4
	2	3
High (HI)	1 and 2	3 and 4

CONSULT-II Reference Value in Data Monitor Mode

ABS00GX4

Specification data are reference values.

MONITOR ITEM	CONDITION		SPECIFICATION
AIR COND SIG	● Engine: After warming up, idle the engine	Air conditioner switch: OFF	OFF
		Air conditioner switch: ON (Compressor operates.)	ON
COOLING FAN	● Engine: After warming up, idle the engine ● Air conditioner switch: OFF	Engine coolant temperature is 94°C (201°F) or less	OFF
		Engine coolant temperature is between 95°C (203°F) and 99°C (210°F)	LOW
		Engine coolant temperature is 100°C (212°F) or more	HI

On Board Diagnosis Logic

ABS00GX5

If the cooling fan or another component in the cooling system malfunctions, engine coolant temperature will rise.
When the engine coolant temperature reaches an abnormally high temperature condition, a malfunction is indicated.
This self-diagnosis has the one trip detection logic.

DTC No.	Trouble diagnosis name	DTC detecting condition	Possible cause
P1217 1217	Engine over temperature (Overheat)	● Cooling fan does not operate properly (Overheat). ● Cooling fan system does not operate properly (Overheat). ● Engine coolant level was not added to the system using the proper filling method. ● Engine coolant is not within the specified range.	● Harness or connectors (The cooling fan circuit is open or shorted.) ● Cooling fan ● Cooling fan relay (IPDM E/R) ● Radiator hose ● Radiator ● Radiator cap ● Water pump ● Thermostat For more information, refer to EC-433, "Main 12 Causes of Overheating" .

CAUTION:
When a malfunction is indicated, be sure to replace the coolant. Refer to MA-15, "Changing Engine Coolant" . Also, replace the engine oil. Refer to MA-21, "Changing Engine Oil" .

1. **Fill radiator with coolant up to specified level with a filling speed of 2 liters per minute. Be sure to use coolant with the proper mixture ratio. Refer to MA-13, "Engine Coolant Mixture Ratio" .**
2. **After refilling coolant, run engine to ensure that no water-flow noise is emitted.**

Overall Function Check

ABS00GX6

Use this procedure to check the overall function of the cooling fan. During this check, a DTC might not be confirmed.

WARNING:
Never remove the radiator cap when the engine is hot. Serious burns could be caused by high pressure fluid escaping from the radiator.
Wrap a thick cloth around cap. Carefully remove the cap by turning it a quarter turn to allow built-up pressure to escape. Then turn the cap all the way off.

WITH CONSULT-II

1. Check the coolant level in the reservoir tank and radiator.
   Allow engine to cool before checking coolant level.
   If the coolant level in the reservoir tank and/or radiator is below the proper range, skip the following steps and check possible cause items.
2. Confirm whether customer filled the coolant or not. If customer filled the coolant, skip the following steps and check possible cause items.
3. Turn ignition switch ON.

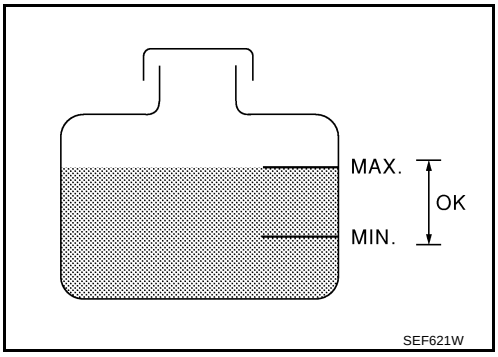

4. Perform “COOLING FAN” in “ACTIVE TEST” mode with CONSULT-II.
5. If the results are NG, check possible cause items.

ACTIVE TEST	
COOLING FAN	OFF
MONITOR	
COOLAN TEMP/S	XXX °C

SEF646X

WITHOUT CONSULT-II

1. Check the coolant level in the reservoir tank and radiator.

   NOTE:
   Allow engine to cool before checking coolant level.
   If the coolant level in the reservoir tank and/or radiator is below the proper range, skip the following steps and check possible cause items.
2. Confirm whether customer filled the coolant or not. If customer filled the coolant, skip the following steps and check possible cause items.
3. Start engine.

   CAUTION:
   Be careful not to overheat engine.
4. Turn air conditioner switch ON.
5. Turn blower fan switch ON.
6. Make sure that cooling fan operates at low speed.
   If NG, check possible cause items.
   If OK, go to the following step.
7. Turn ignition switch OFF.
8. Turn air conditioner switch and blower fan switch OFF.
9. Disconnect engine coolant temperature sensor harness connector.
10. Connect 150Ω resistor to engine coolant temperature sensor harness connector.

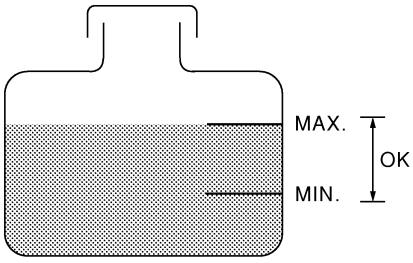

SEF621W

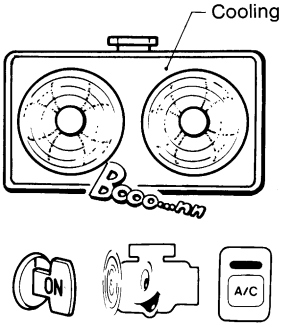

SEC163BA

11. Restart engine and make sure that cooling fan operates at higher speed than low speed.

    CAUTION:
    Be careful not to overheat engine.
12. If NG, check possible cause items.

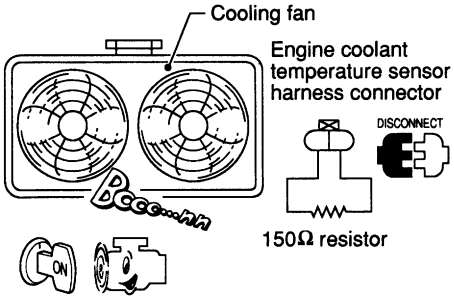

MEC475B

Wiring Diagram
LHD MODELS

ABS00GX7

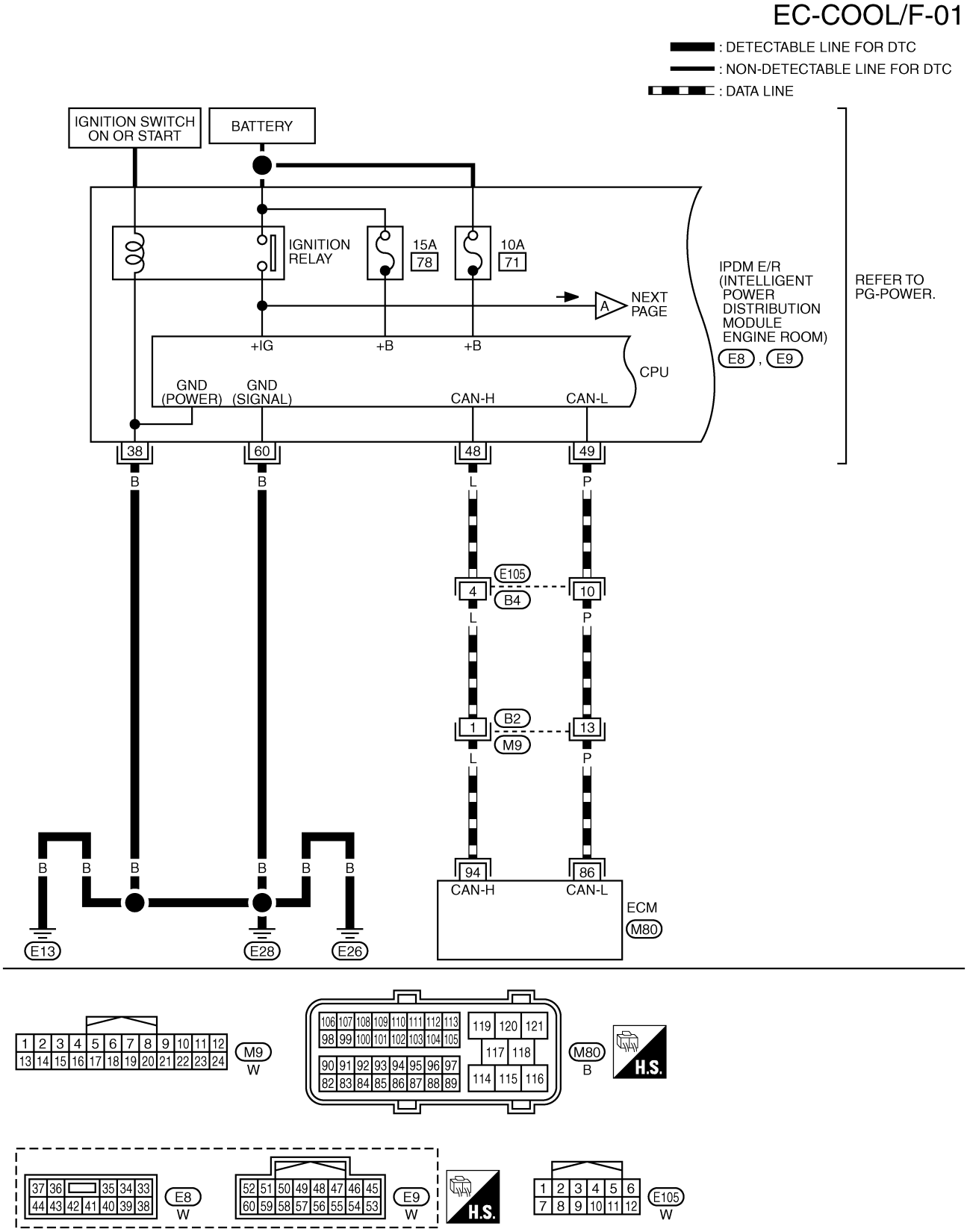

EC-COOL/F-02

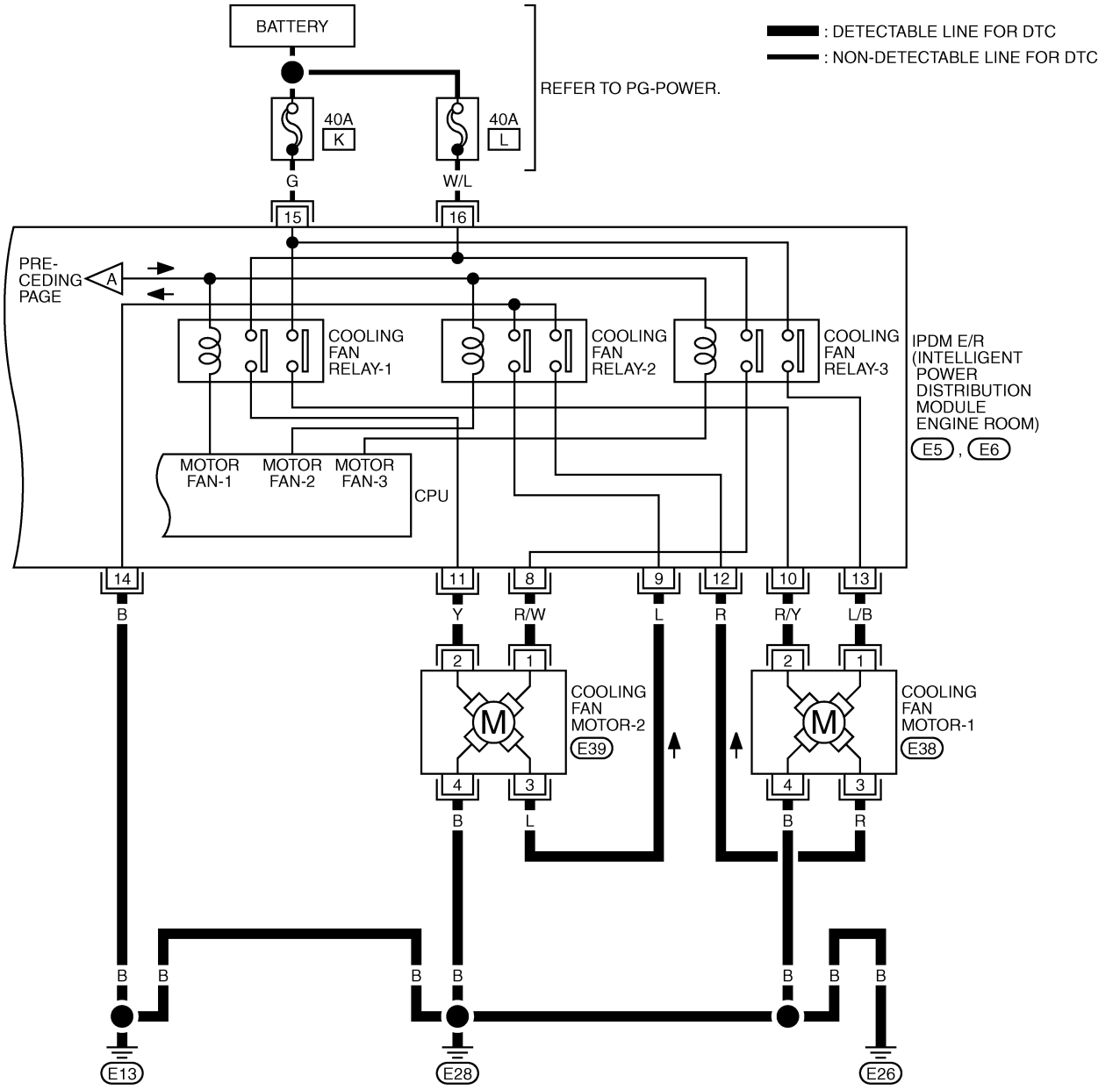

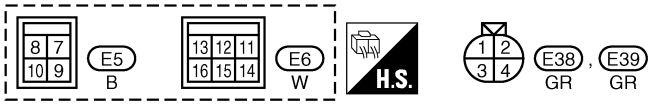

TBWB0863E

Main 12 Causes of Overheating

ABS00H3A

Engine	Step	Inspection item	Equipment	Standard
OFF	1	● Blocked radiator ● Blocked condenser ● Blocked radiator grille ● Blocked bumper	● Visual	No blocking
	2	● Coolant mixture	● Coolant tester	50 - 50% coolant mixture
	3	● Coolant level	● Visual	Coolant up to MAX level in reservoir tank and radiator filler neck
	4	● Radiator cap	● Pressure tester	78 - 98 kPa (0.78 - 0.98 bar, 0.8 - 1.0 kg/cm^2, 11 - 14 psi) (Limit)
ON*2	5	● Coolant leaks	● Visual	No leaks
ON*2	6	● Thermostat	● Touch the upper and lower radiator hoses	Both hoses should be hot
ON*1	7	● Cooling fan	● CONSULT-II	Operating
OFF	8	● Combustion gas leak	● Color checker chemical tester 4 Gas analyzer	Negative
ON*3	9	● Coolant temperature gauge	● Visual	Gauge less than 3/4 when driving
		● Coolant overflow to reservoir tank	● Visual	No overflow during driving and idling
OFF*4	10	● Coolant return from reservoir tank to radiator	● Visual	Should be initial level in reservoir tank
OFF	11	● Cylinder head	● Straight gauge feeler gauge	0.1 mm (0.004 in) Maximum distortion (warping)
	12	● Cylinder block and pistons	● Visual	No scuffing on cylinder walls or piston

*1: Turn the ignition switch ON.
*2: Engine running at 3,000 rpm for 10 minutes.
*3: Drive at 90 km/h (55 MPH) for 30 minutes and then let idle for 10 minutes.
*4: After 60 minutes of cool down time.

DTC P1225 TP SENSOR

PFP:16119

Component Description

ABS00GXB

Electric throttle control actuator consists of throttle control motor, throttle position sensor, etc. The throttle position sensor responds to the throttle valve movement.
The throttle position sensor has two sensors. These sensors are a kind of potentiometers which transform the throttle valve position into output voltage, and emit the voltage signal to the ECM. In addition, these sensors detect the opening and closing speed of the throttle valve and feed the voltage signals to the ECM. The ECM judges the current opening angle of the throttle valve from these signals and the ECM controls the throttle control motor to make the throttle valve opening angle properly in response to driving condition.

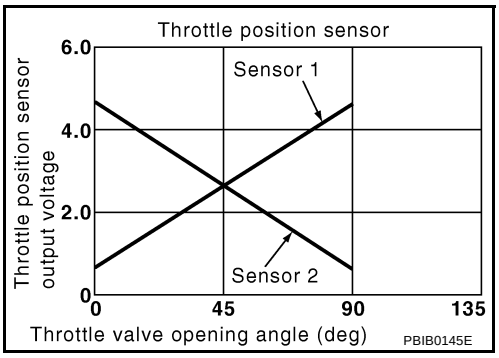

On Board Diagnosis Logic

ABS00GXC

The MIL will not light up for this diagnosis.

DTC No.	Trouble diagnosis name	DTC detecting condition	Possible cause
P1225 1225	Closed throttle position learning performance problem	Closed throttle position learning value is excessively low.	● Electric throttle control actuator (TP sensor 1 and 2)

DTC Confirmation Procedure

ABS00GXD

NOTE:
If DTC Confirmation Procedure has been previously conducted, always turn ignition switch OFF and wait at least 10 seconds before conducting the next test.
TESTING CONDITION:
Before performing the following procedure, confirm that battery voltage is more than 10V at idle.

WITH CONSULT-II

1. Turn ignition switch ON.
2. Select “DATA MONITOR” mode with CONSULT-II.
3. Turn ignition switch OFF, wait at least 10 seconds.
4. Turn ignition switch ON.
5. If 1st trip DTC is detected, check possible cause items.

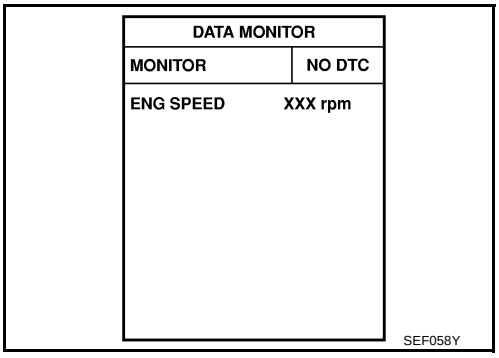

WITHOUT CONSULT-II

1. Turn ignition switch ON.
2. Turn ignition switch OFF, wait at least 10 seconds and then turn ON.
3. Perform Diagnostic Test Mode II (Self-diagnostic results) with ECM.
4. If 1st trip DTC is detected, check possible cause items.

DTC P1226 TP SENSOR

PFP:16119

Component Description

ABS00GXG

Electric throttle control actuator consists of throttle control motor, throttle position sensor, etc. The throttle position sensor responds to the throttle valve movement.
The throttle position sensor has two sensors. These sensors are a kind of potentiometers which transform the throttle valve position into output voltage, and emit the voltage signal to the ECM. In addition, these sensors detect the opening and closing speed of the throttle valve and feed the voltage signals to the ECM. The ECM judges the current opening angle of the throttle valve from these signals and the ECM controls the throttle control motor to make the throttle valve opening angle properly in response to driving condition.

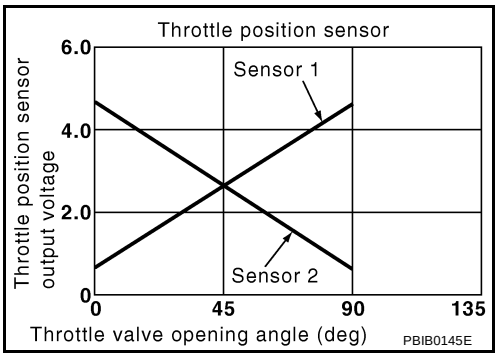

On Board Diagnosis Logic

ABS00GXH

The MIL will not light up for this diagnosis.

DTC No.	Trouble diagnosis name	DTC detecting condition	Possible cause
P1226 1226	Closed throttle position learning performance problem	Closed throttle position learning is not performed successfully, repeatedly.	● Electric throttle control actuator (TP sensor 1 and 2)

DTC Confirmation Procedure

ABS00GXI

NOTE:
If DTC Confirmation Procedure has been previously conducted, always turn ignition switch OFF and wait at least 10 seconds before conducting the next test.
TESTING CONDITION:
Before performing the following procedure, confirm that battery voltage is more than 10V at idle.

WITH CONSULT-II

1. Turn ignition switch ON.
2. Select “DATA MONITOR” mode with CONSULT-II.
3. Turn ignition switch OFF, wait at least 10 seconds.
4. Turn ignition switch ON.
5. Repeat steps 3 and 4 for 32 times.
6. If 1st trip DTC is detected, check possible cause items.

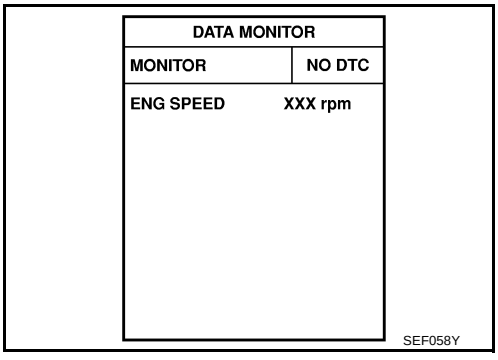

WITHOUT CONSULT-II

1. Turn ignition switch ON.
2. Turn ignition switch OFF, wait at least 10 seconds and then turn ON.
3. Repeat step 2 for 32 times.
4. Perform Diagnostic Test Mode II (Self-diagnostic results) with ECM.
5. If 1st trip DTC is detected, check possible cause items.

DTC P1229 SENSOR POWER SUPPLY

PFP:16119

On Board Diagnosis Logic

ABS00GXL

This self-diagnosis has the one trip detection logic.

DTC No.	Trouble diagnosis name	DTC detecting condition	Possible cause
P1229 1229	Sensor power supply circuit short	ECM detects a voltage of power source for sensor is excessively low or high.	● Harness or connectors (APP sensor 1 circuit is shorted.) (PSP sensor circuit is shorted.) (Refrigerant pressure sensor circuit is shorted.) ● Accelerator pedal position sensor ● Power steering pressure sensor ● Refrigerant pressure sensor

FAIL-SAFE MODE

When the malfunction is detected, ECM enters fail-safe mode and the MIL lights up.

Engine operation condition in fail-safe mode
ECM stops the electric throttle control actuator control, throttle valve is maintained at a fixed opening (approx. 5 degrees) by the return spring.

DTC Confirmation Procedure

ABS00GXM

NOTE:
If DTC Confirmation Procedure has been previously conducted, always turn ignition switch OFF and wait at least 10 seconds before conducting the next test.
TESTING CONDITION:
Before performing the following procedure, confirm that battery voltage is more than 10V at idle.

WITH CONSULT-II

1. Turn ignition switch ON.
2. Select “DATA MONITOR” mode with CONSULT-II.
3. Start engine and let it idle for 1 second.
4. If DTC is detected, check possible cause items.

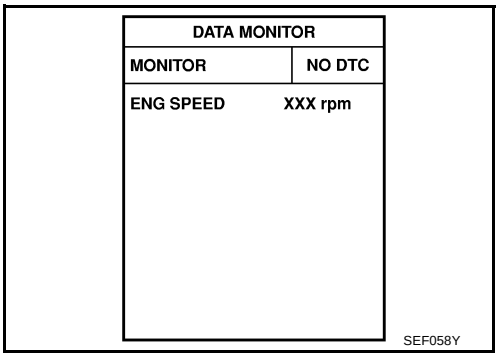

WITHOUT CONSULT-II

1. Start engine and let it idle for 1 second.
2. Turn ignition switch OFF, wait at least 10 seconds and then turn ON.
3. Perform Diagnostic Test Mode II (Self-diagnostic results) with ECM.
4. If DTC is detected, check possible cause items.

Wiring Diagram
LHD MODELS

ABS00GXN

EC-SEN/PW-01

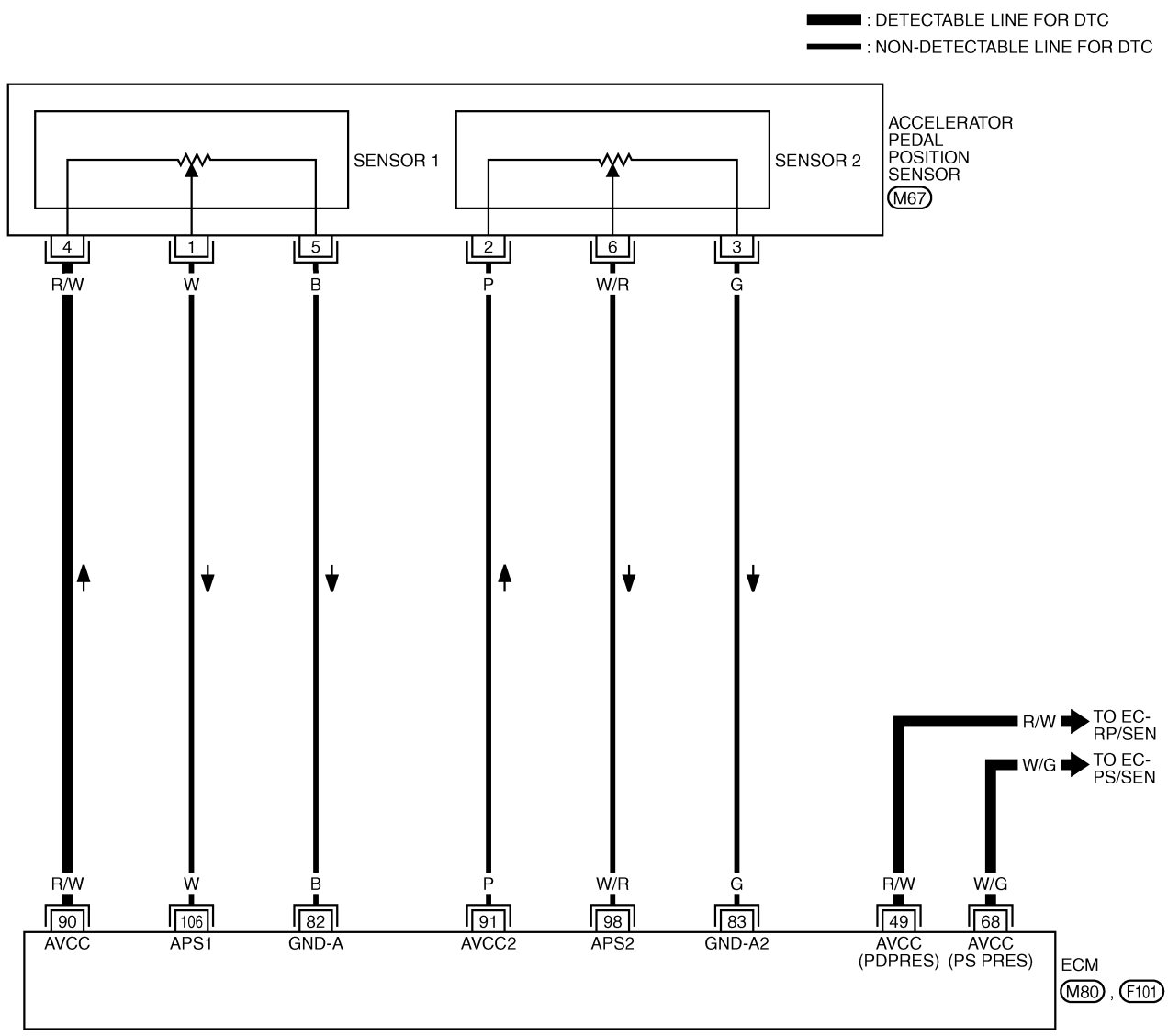

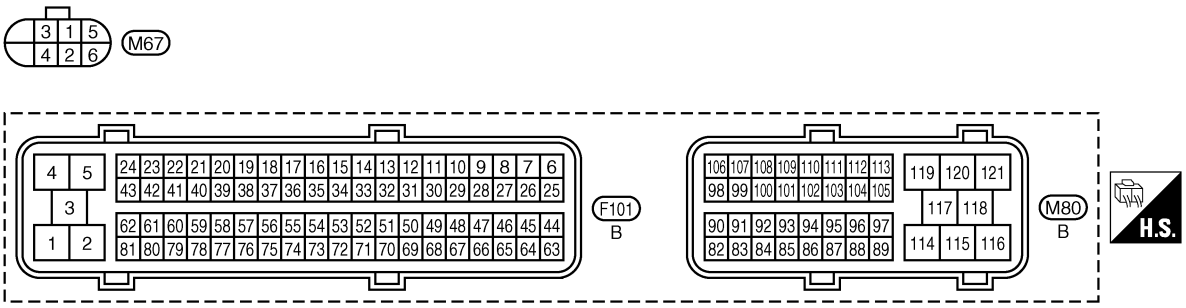

TBWB0525E

DTC P1271, P1281 A/F SENSOR 1

PFP:22693

Component Description

ABS00GXP

The A/F sensor is a planar dual-cell limit current sensor. The sensor element of the A/F sensor is the combination of a Nernst concentration cell (sensor cell) with an oxygen-pump cell, which transports ions. It has a heater in the element.

The sensor is capable of precise measurement λ = 1, but also in the lean and rich range. Together with its control electronics, the sensor outputs a clear, continuous signal throughout a wide λ range (0.7 < λ < air).

The exhaust gas components diffuse through the diffusion gap at the electrode of the oxygen pump and Nernst concentration cell, where they are brought to thermodynamic balance.

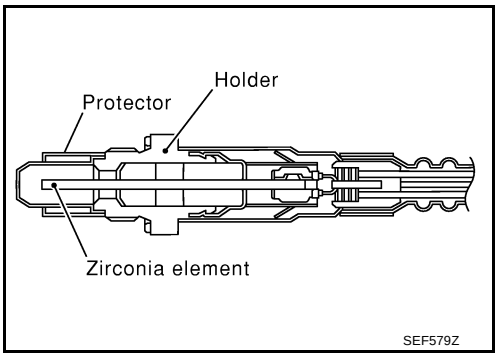

An electronic circuit controls the pump current through the oxygen-pump cell so that the composition of the exhaust gas in the diffusion gap remains constant at λ = 1. Therefore, the A/F sensor is able to indicate air/fuel ratio by this pumping of current. In addition, a heater is integrated in the sensor to ensure the required operating temperature of 700 - 800°C (1,292 - 1,472°F).

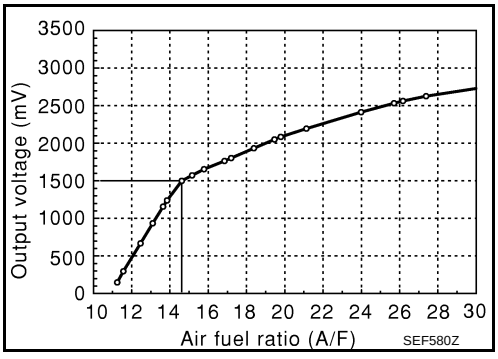

CONSULT-II Reference Value in Data Monitor Mode

ABS00GXQ

Specification data are reference values.

MONITOR ITEM	CONDITION		SPECIFICATION
A/F SEN1 (B1) A/F SEN1 (B2)	● Engine: After warming up	Maintaining engine speed at 2,000 rpm	Fluctuates around 1.5V

On Board Diagnosis Logic

ABS00GXR

To judge the malfunction, the diagnosis checks that the A/F signal computed by ECM from the air fuel ratio (A/F) sensor 1 signal is not inordinately low.

DTC No.	Trouble diagnosis name	DTC detecting condition	Possible Cause
P1271 1271 (Bank 1)	Air fuel ratio (A/F) sensor 1 circuit no activity detected	● The A/F signal computed by ECM from the A/F sensor 1 signal is constantly approx. 0V.	● Harness or connectors (The A/F sensor 1 circuit is open or shorted.) ● Air fuel ratio (A/F) sensor 1
P1281 1281 (Bank 2)			

DTC Confirmation Procedure

ABS00GXS

NOTE:

If DTC Confirmation Procedure has been previously conducted, always turn ignition switch OFF and wait at least 10 seconds before conducting the next test.

TESTING CONDITION:

Before performing the following procedure, confirm that battery voltage is more than 11V at idle.

WITH CONSULT-II

1. Start engine and warm it up to normal operating temperature.
2. Select “A/F SEN1 (B1)” or “A/F SEN1 (B2)” in “DATA MONITOR” mode with CONSULT-II.

3. Check “A/F SEN1 (B1)” or “A/F SEN1 (B2)” indication.
   If the indication is constantly approx. 0V, check possible cause items.
   If the indication is not constantly approx. 0V, go to next step.
4. Turn ignition switch OFF, wait at least 10 seconds and then restart engine.
5. Drive and accelerate vehicle to more than 40 km/h (25 MPH) within 20 seconds after restarting engine.
6. Maintain the following conditions for about 20 consecutive seconds.

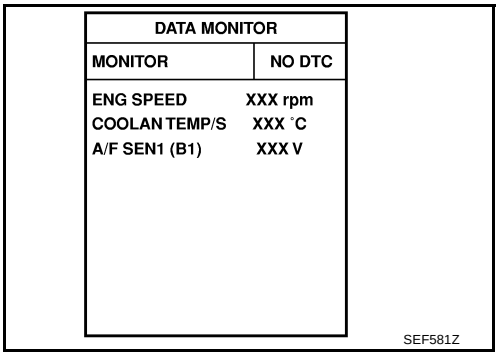

ENG SPEED	1,000 - 3,200 rpm
VHCL SPEED SE	More than 40 km/h (25 MPH)
B/FUEL SCHDL	1.5 - 9.0 msec
Gear position	Suitable position

NOTE:
- **Keep the accelerator pedal as steady as possible during the cruising.**
- **If this procedure is not completed within 1 minute after restarting engine at step 4, return to step 4.**

7. If 1st trip DTC is displayed, check possible cause items.

Overall Function Check

ABS00GXT

Use this procedure to check the overall function of the A/F sensor 1 circuit.

WITHOUT CONSULT-II

1. Start engine and warm it up to normal operating temperature.
2. Turn ignition switch OFF, wait at least 10 seconds and then restart engine.
3. Drive and accelerate vehicle to more than 40 km/h (25 MPH) within 20 seconds after restarting engine.
4. Maintain the following conditions for about 20 consecutive seconds.

Engine speed	1,000 - 3,200 rpm
Vehicle speed	More than 40 km/h (25 MPH)
Shift lever	Suitable position
Driving location	Driving at level road (To avoid overloading will help maintain the driving conditions required for this test.)

NOTE:
- **Keep the accelerator pedal as steady as possible during the cruising.**
- **If this procedure is not completed within 1 minute after restarting engine at step 2, return to step 2.**

5. Repeat steps 2 to 4.
6. Stop the vehicle.
7. Turn ignition switch OFF, wait at least 10 seconds and then turn ON.
8. Perform Diagnostic Test Mode II (Self-diagnostic results) with ECM.
9. Make sure that no DTC is detected.
   If 1st trip DTC is detected, check possible cause items.

Wiring Diagram
LHD MODELS
Bank 1

ABS00GXU

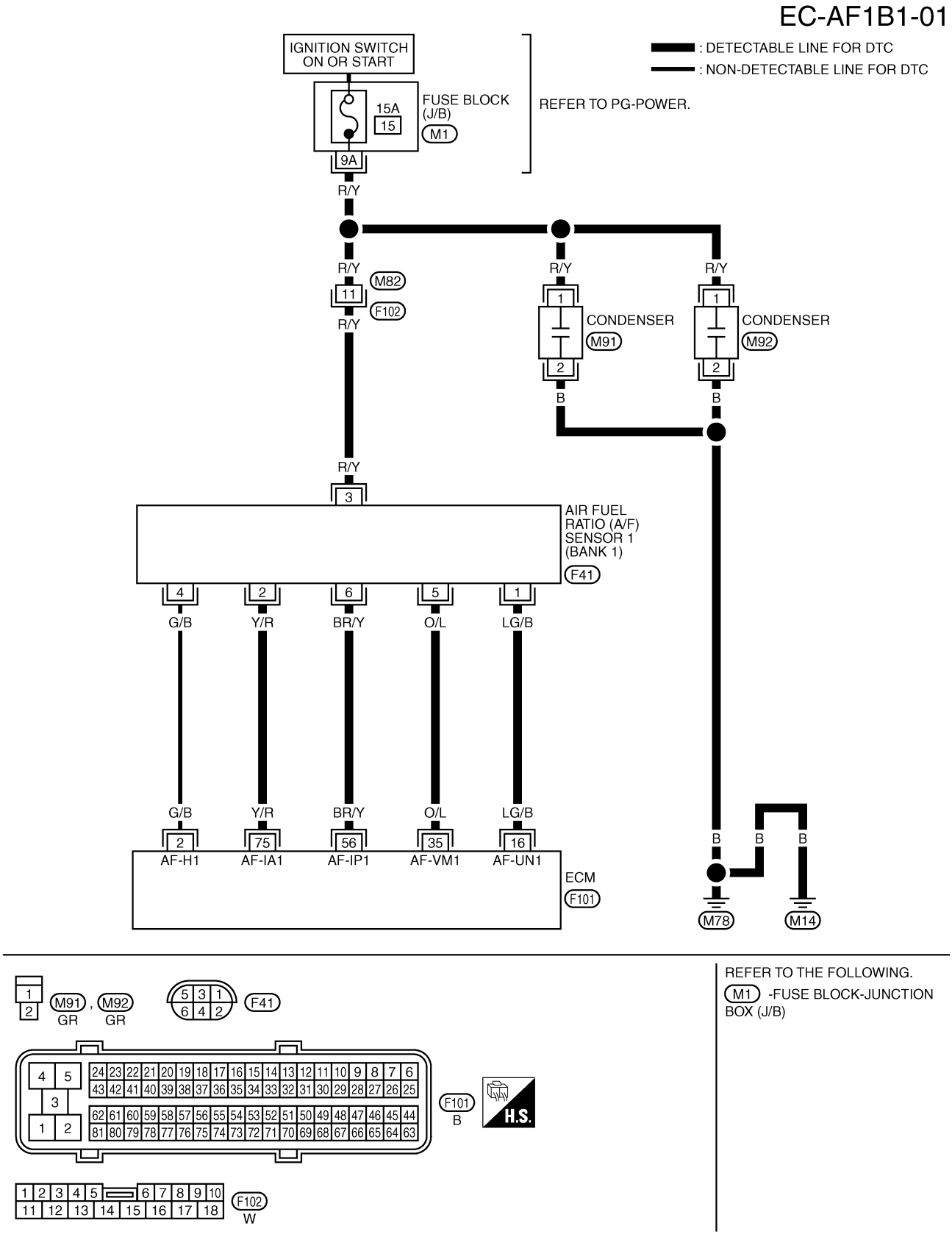

Bank 2

EC-AF1B2-01

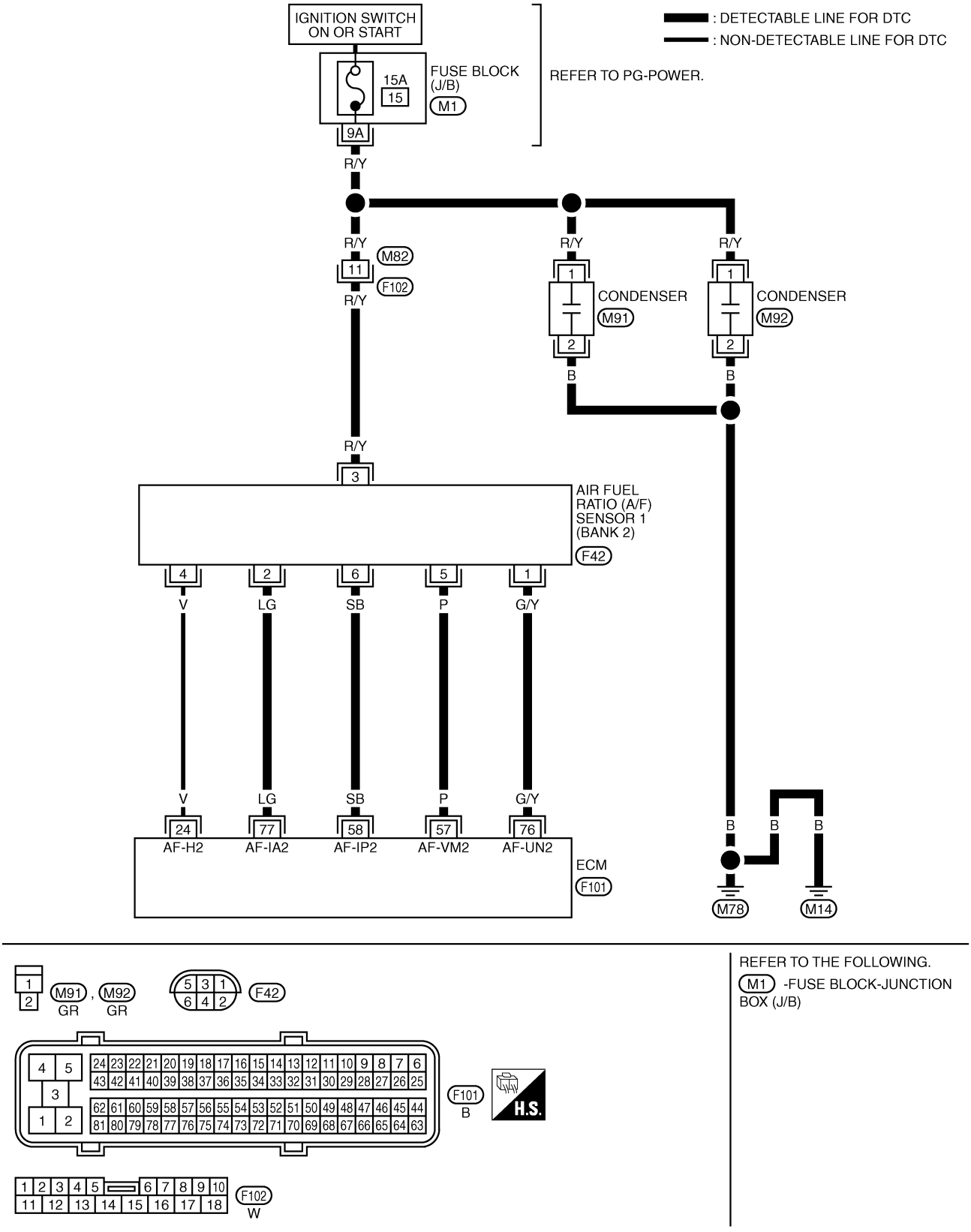

DTC P1272, P1282 A/F SENSOR 1

PFP:22693

Component Description

ABS00GXX

The A/F sensor is a planar dual-cell limit current sensor. The sensor element of the A/F sensor is the combination of a Nernst concentration cell (sensor cell) with an oxygen-pump cell, which transports ions. It has a heater in the element.

The sensor is capable of precise measurement λ = 1, but also in the lean and rich range. Together with its control electronics, the sensor outputs a clear, continuous signal throughout a wide λ range (0.7 < λ < air).

The exhaust gas components diffuse through the diffusion gap at the electrode of the oxygen pump and Nernst concentration cell, where they are brought to thermodynamic balance.

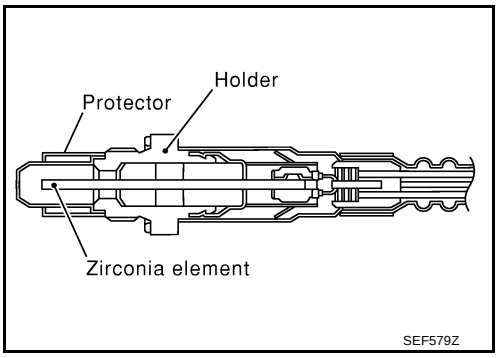

An electronic circuit controls the pump current through the oxygen-pump cell so that the composition of the exhaust gas in the diffusion gap remains constant at λ = 1. Therefore, the A/F sensor is able to indicate air/fuel ratio by this pumping of current. In addition, a heater is integrated in the sensor to ensure the required operating temperature of 700 - 800°C (1,292 - 1,472°F).

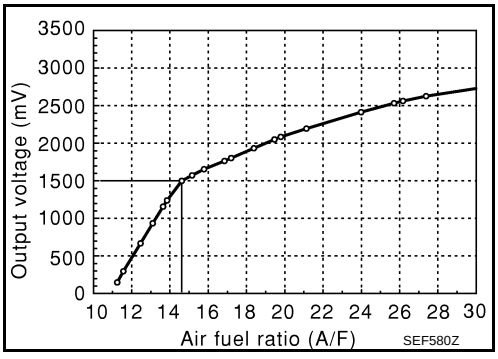

CONSULT-II Reference Value in Data Monitor Mode

ABS00GXY

Specification data are reference values.

MONITOR ITEM	CONDITION		SPECIFICATION
A/F SEN1 (B1) A/F SEN1 (B2)	● Engine: After warming up	Maintaining engine speed at 2,000 rpm	Fluctuates around 1.5V

On Board Diagnosis Logic

ABS00GXZ

To judge the malfunction, the diagnosis checks that the A/F signal computed by ECM from the air fuel ratio (A/F) sensor 1 signal is not inordinately high.

DTC No.	Trouble diagnosis name	DTC detecting condition	Possible Cause
P1272 1272 (Bank 1)	Air fuel ratio (A/F) sensor 1 circuit no activity detected	● The A/F signal computed by ECM from the A/F sensor 1 signal is constantly approx. 5V.	● Harness or connectors (The A/F sensor 1 circuit is open or shorted.) ● Air fuel ratio (A/F) sensor 1
P1282 1282 (Bank 2)			

DTC Confirmation Procedure

ABS00GY0

NOTE:
If DTC Confirmation Procedure has been previously conducted, always turn ignition switch OFF and wait at least 10 seconds before conducting the next test.

TESTING CONDITION:
Before performing the following procedure, confirm that battery voltage is more than 11V at idle.

WITH CONSULT-II

1. Start engine and warm it up to normal operating temperature.
2. Select “A/F SEN1 (B1)” or “A/F SEN1 (B2)” in “DATA MONITOR” mode with CONSULT-II.

3. Check “A/F SEN1 (B1)” or “A/F SEN1 (B2)” indication.
   If the indication is constantly approx. 5V, check possible cause items.
   If the indication is not constantly approx. 5V, go to next step.
4. Turn ignition switch OFF, wait at least 10 seconds and then restart engine.
5. Drive and accelerate vehicle to more than 40 km/h (25 MPH) within 20 seconds after restarting engine.
6. Maintain the following conditions for about 20 consecutive seconds.

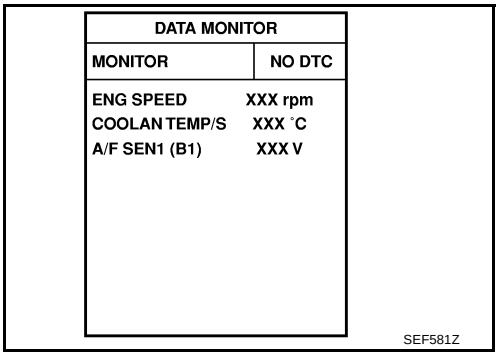

ENG SPEED	1,000 - 3,200 rpm
VHCL SPEED SE	More than 40 km/h (25 MPH)
B/FUEL SCHDL	1.5 - 9.0 msec
Gear position	Suitable position

NOTE:
- **Keep the accelerator pedal as steady as possible during the cruising.**
- **If this procedure is not completed within 1 minute after restarting engine at step 4, return to step 4.**

7. If 1st trip DTC is detected, check possible cause items.

Overall Function Check

ABS00GY1

Use this procedure to check the overall function of the A/F sensor 1 circuit.

WITHOUT CONSULT-II

1. Start engine and warm it up to normal operating temperature.
2. Turn ignition switch OFF, wait at least 10 seconds and then restart engine.
3. Drive and accelerate vehicle to more than 40 km/h (25 MPH) within 20 seconds after restarting engine.
4. Maintain the following conditions for about 20 consecutive seconds.

Engine speed	1,000 - 3,200 rpm
Vehicle speed	More than 40 km/h (25 MPH)
Shift lever	Suitable position
Driving location	Driving at level road (To avoid overloading will help maintain the driving conditions required for this test.)

NOTE:
- **Keep the accelerator pedal as steady as possible during the cruising.**
- **If this procedure is not completed within 1 minute after restarting engine at step 2, return to step 2.**

5. Repeat steps 2 to 4.
6. Stop the vehicle.
7. Turn ignition switch OFF, wait at least 10 seconds and then turn ON.
8. Perform Diagnostic Test Mode II (Self-diagnostic results) with ECM.
9. Make sure that no DTC is detected.
   If 1st trip DTC is detected, check possible cause items.

Wiring Diagram
LHD MODELS
Bank 1

ABS00GY2

EC-AF1B1-01

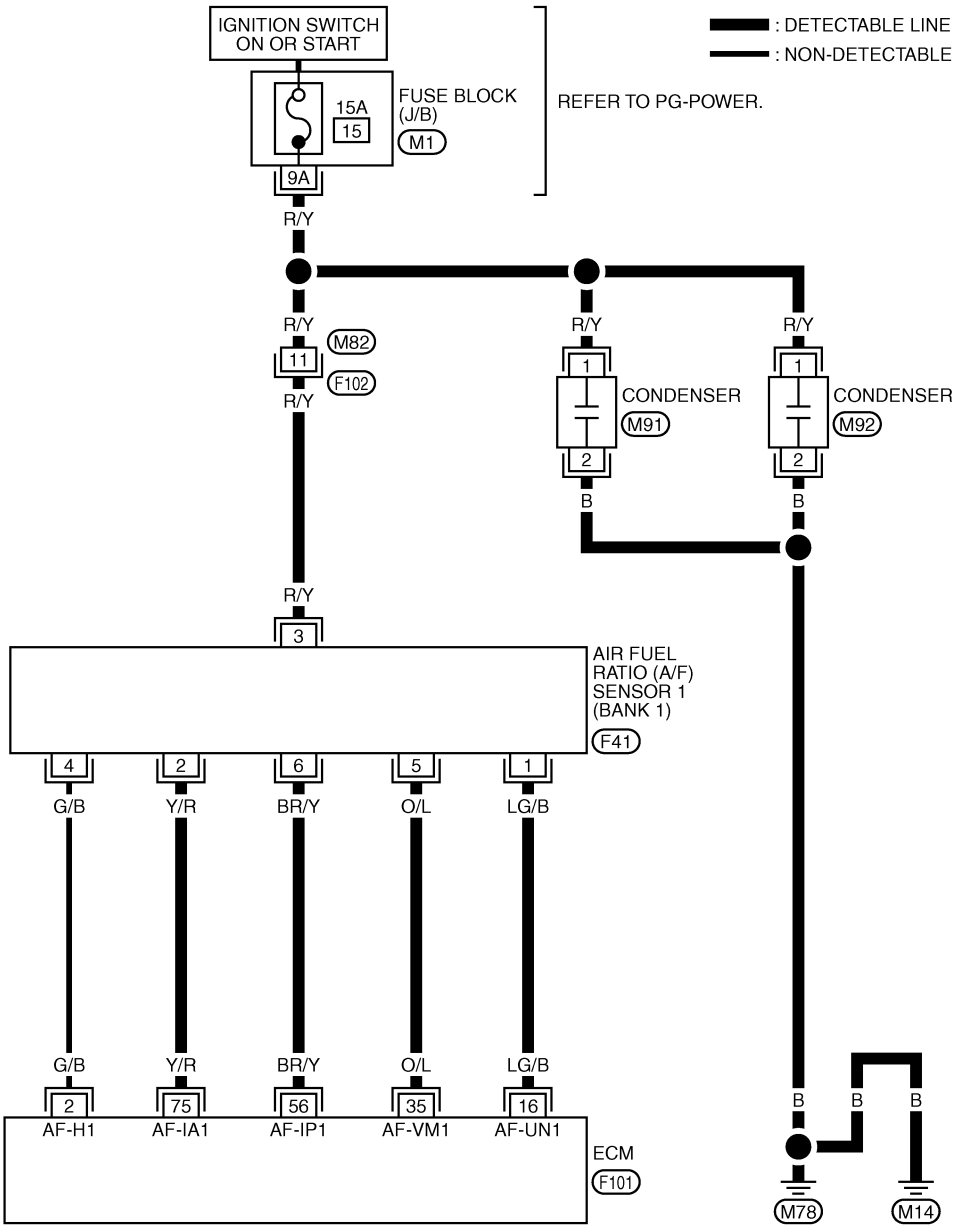

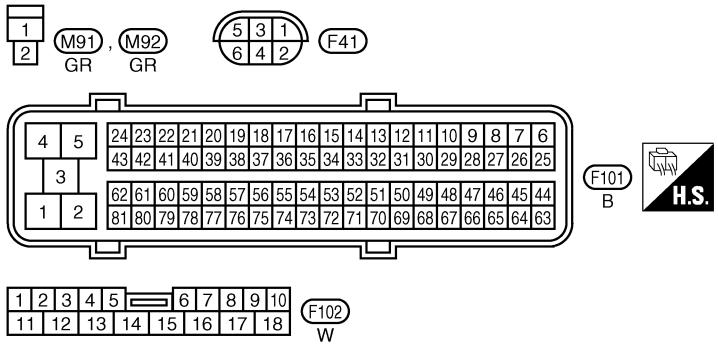

REFER TO THE FOLLOWING.
M1 -FUSE BLOCK-JUNCTION BOX (J/B)

TBWA0692E

Bank 2

EC-AF1B2-01

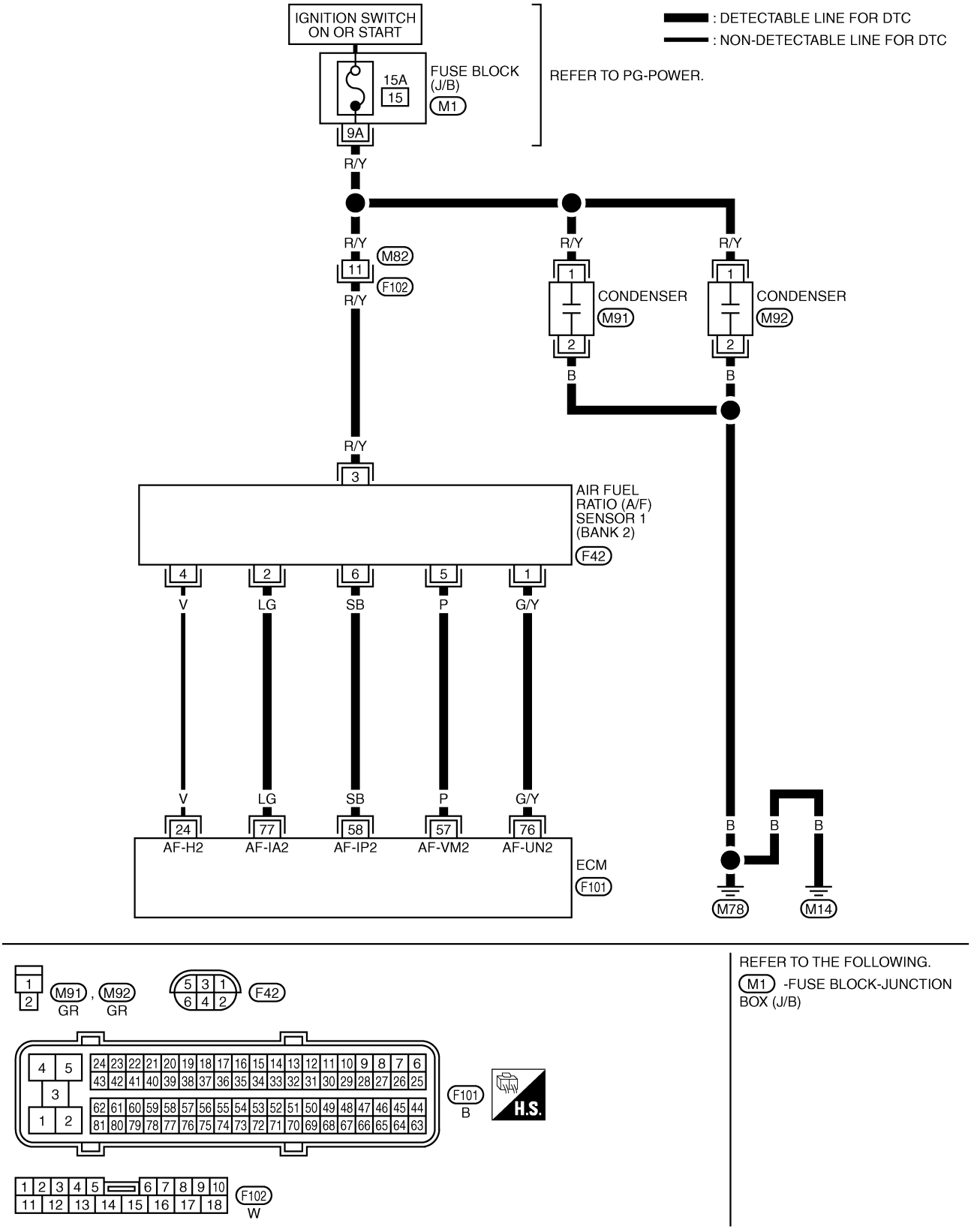

DTC P1276, P1286 A/F SENSOR 1

PFP:22693

Component Description

ABS00GY5

The A/F sensor is a planar dual-cell limit current sensor. The sensor element of the A/F sensor is the combination of a Nernst concentration cell (sensor cell) with an oxygen-pump cell, which transports ions. It has a heater in the element.

The sensor is capable of precise measurement λ = 1, but also in the lean and rich range. Together with its control electronics, the sensor outputs a clear, continuous signal throughout a wide λ range (0.7 < λ < air).

The exhaust gas components diffuse through the diffusion gap at the electrode of the oxygen pump and Nernst concentration cell, where they are brought to thermodynamic balance.

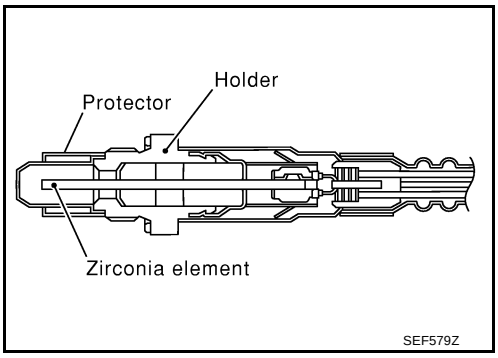

An electronic circuit controls the pump current through the oxygen-pump cell so that the composition of the exhaust gas in the diffusion gap remains constant at λ = 1. Therefore, the A/F sensor is able to indicate air/fuel ratio by this pumping of current. In addition, a heater is integrated in the sensor to ensure the required operating temperature of 700 - 800°C (1,292 - 1,472°F).

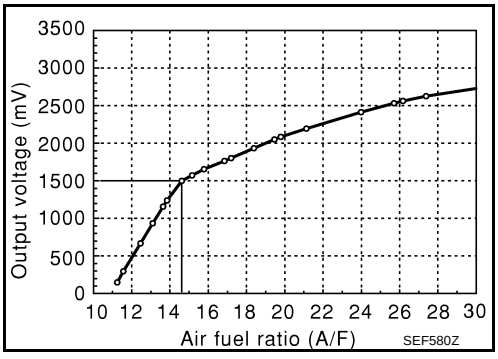

CONSULT-II Reference Value in Data Monitor Mode

ABS00GY6

Specification data are reference values.

MONITOR ITEM	CONDITION		SPECIFICATION
A/F SEN1 (B1) A/F SEN1 (B2)	● Engine: After warming up	Maintaining engine speed at 2,000 rpm	Fluctuates around 1.5V

On Board Diagnosis Logic

ABS00GY7

To judge the malfunction, the diagnosis checks that the A/F signal computed by ECM from the air fuel ratio (A/F) sensor 1 signal fluctuates according to fuel feedback control.

DTC No.	Trouble diagnosis name	DTC detecting condition	Possible Cause
P1276 1276 (Bank 1)	Air fuel ratio (A/F) sensor 1 circuit high voltage	● The A/F signal computed by ECM from the A/F sensor 1 signal is constantly approx. 1.5V.	● Harness or connectors (The A/F sensor 1 circuit is open or shorted.) ● Air fuel ratio (A/F) sensor 1
P1286 1286 (Bank 2)			

Overall Function Check

ABS00GY8

Use this procedure to check the overall function of the A/F sensor 1 circuit.

WITH CONSULT-II

1. Start engine and warm it up to normal operating temperature.
2. Select “A/F SEN1 (B1)” or “A/F SEN1 (B2)” in “DATA MONITOR” mode with CONSULT-II.
3. Check “A/F SEN1 (B1)” or “A/F SEN1 (B2)” indication.
   If the indication is constantly approx. 1.5V and does not fluctuates, check possible cause items.
   If the indication fluctuates around 1.5V, go to next step.
4. Turn ignition switch OFF and wait at least 10 seconds.
5. Start engine and warm it up to normal operating temperature.
6. Select “DATA MONITOR” mode with CONSULT-II.
7. Drive the vehicle at a speed of 80 km/h (50 MPH) for a few minutes in the suitable shift position.
8. Set D position, then release the accelerator pedal fully until the vehicle speed decreases to 50 km/h (30 MPH).

   NOTE:
   Never apply brake during releasing the accelerator pedal.
9. Repeat steps 7 to 8 for five times.
10. Stop the vehicle and turn ignition switch OFF.
11. Wait at least 10 seconds and restart engine.
12. Repeat steps 7 to 8 for five times.
13. Make sure that no DTC is detected.
    If 1st trip DTC is detected, check possible cause items.

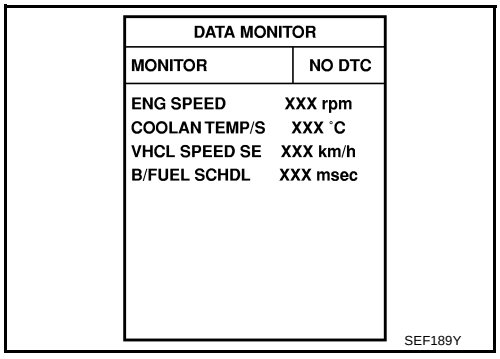

WITHOUT CONSULT-II

1. Start engine and warm it up to normal operating temperature.
2. Drive the vehicle at a speed of 80 km/h (50 MPH) for a few minutes in the suitable shift position.
3. Set D position, then release the accelerator pedal fully until the vehicle speed decreases to 50 km/h (30 MPH).

   NOTE:
   Never apply brake during releasing the accelerator pedal.
4. Repeat steps 2 to 3 for five times.
5. Stop the vehicle and turn ignition switch OFF.
6. Wait at least 10 seconds and restart engine.
7. Repeat steps 2 to 3 for five times.
8. Stop the vehicle.
9. Turn ignition switch OFF, wait at least 10 seconds and then turn ON.
10. Perform Diagnostic Test Mode II (Self-diagnostic results) with ECM.
11. Make sure that no DTC is detected.
    If 1st trip DTC is detected, check possible cause items.

Wiring Diagram
LHD MODELS
Bank 1

ABS00GY9

EC-AF1B1-01

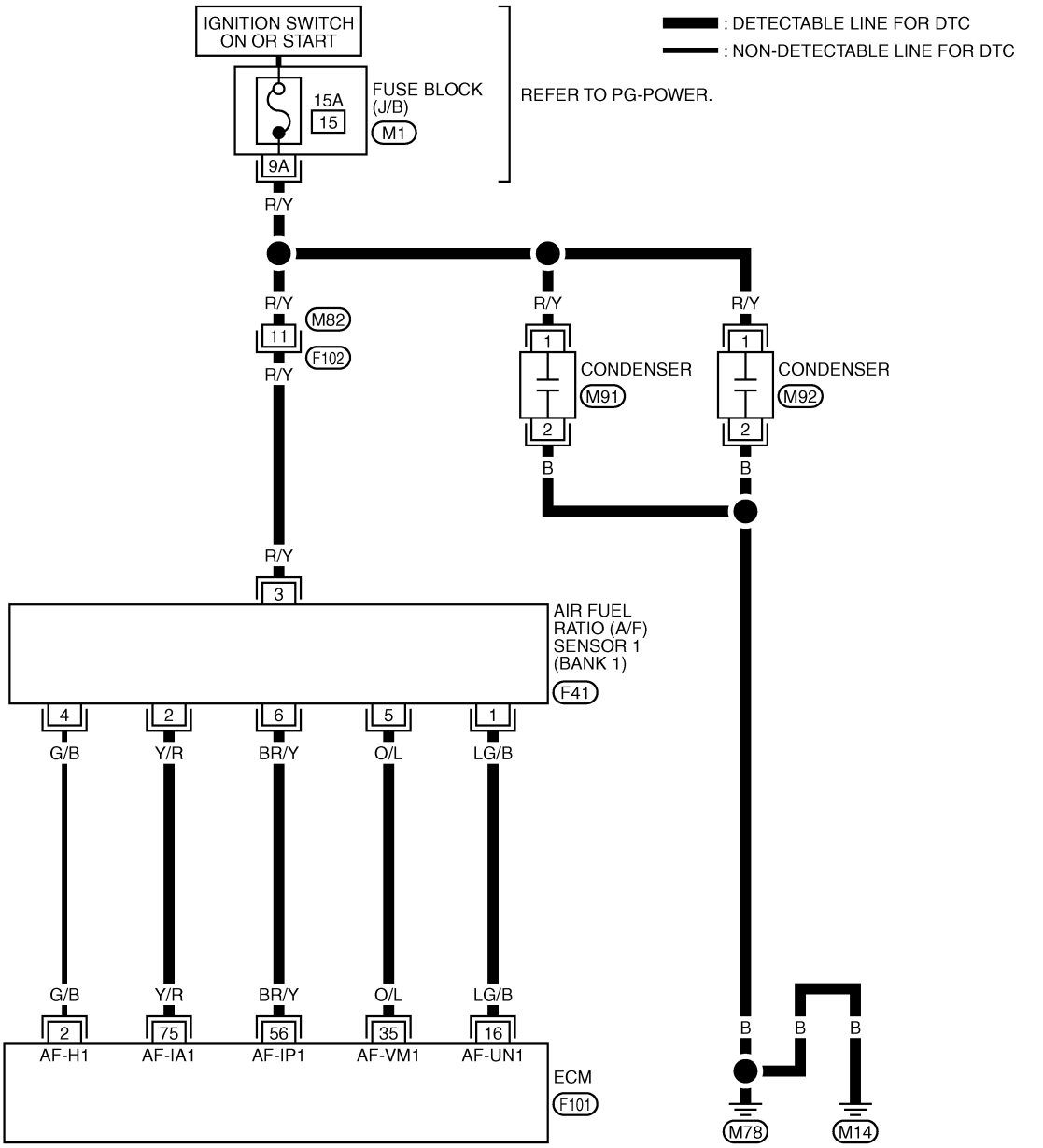

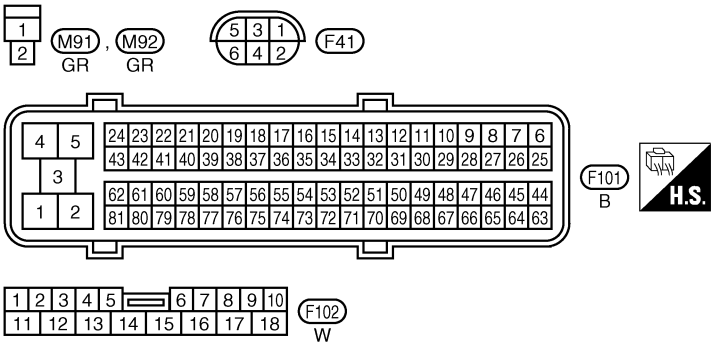

REFER TO THE FOLLOWING.
M1 -FUSE BLOCK-JUNCTION BOX (J/B)

TBWA0692E

Bank 2

EC-AF1B2-01

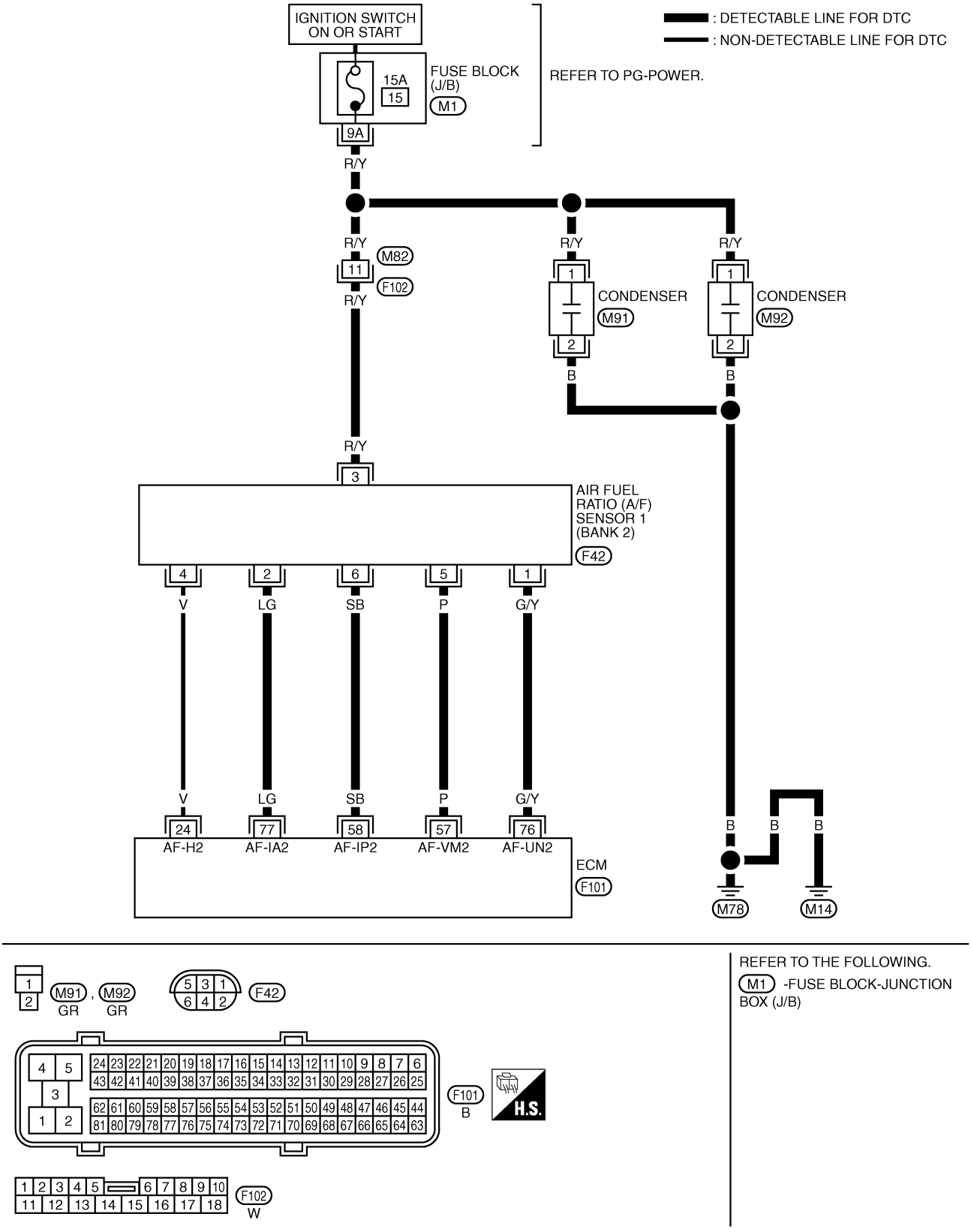

DTC P1564 ASCD STEERING SWITCH

PFP:25551

Component Description

ABS00GYC

ASCD steering switch has variant values of electrical resistance for each button. ECM reads voltage variation of switch, and determines which button is operated.

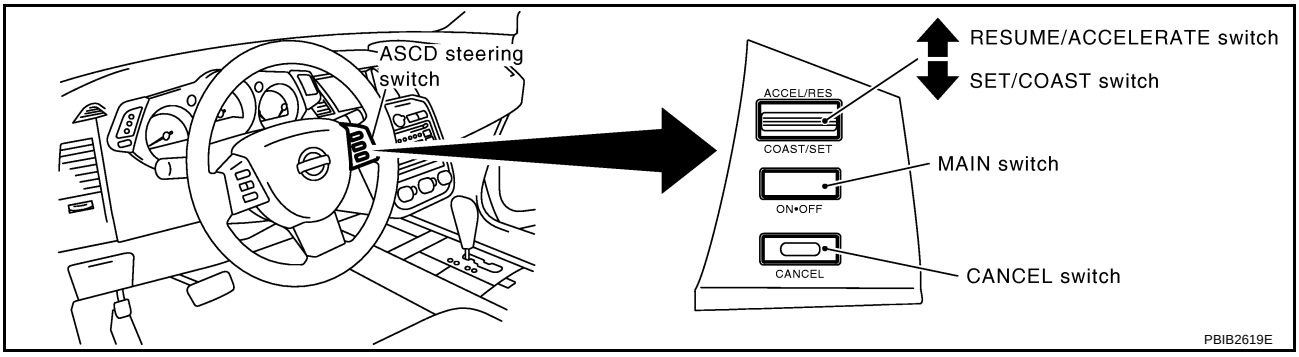

CONSULT-II Reference Value in Data Monitor Mode

ABS00GYD

Specification data are reference values.

MONITOR ITEM	CONDITION		SPECIFICATION
MAIN SW	● Ignition switch: ON	MAIN switch: Pressed	ON
		MAIN switch: Released	OFF
CANCEL SW	● Ignition switch: ON	CANCEL switch: Pressed	ON
		CANCEL switch: Released	OFF
RESUME/ACC SW	● Ignition switch: ON	RESUME/ACCELERATE switch: Pressed	ON
		RESUME/ACCELERATE switch: Released	OFF
SET SW	● Ignition switch: ON	SET/COAST switch: Pressed	ON
		SET/COAST switch: Released	OFF

On Board Diagnosis Logic

ABS00GYE

This self-diagnosis has the one trip detection logic.
The MIL will not light up for this diagnosis.

NOTE:
If DTC P1564 is displayed with DTC P0605, first perform the trouble diagnosis for DTC P0605. Refer to **EC-394**.

DTC No.	Trouble Diagnosis Name	DTC Detecting Condition	Possible Cause
P1564 1564	ASCD steering switch	● An excessively high voltage signal from the ASCD steering switch is sent to ECM. ● ECM detects that input signal from the ASCD steering switch is out of the specified range. ● ECM detects that the ASCD steering switch is stuck ON.	● Harness or connectors (The switch circuit is open or shorted.) ● ASCD steering switch ● ECM

DTC Confirmation Procedure

ABS00GYF

NOTE:
If DTC Confirmation Procedure has been previously conducted, always turn ignition switch OFF and wait at least 10 seconds before conducting the next test.

WITH CONSULT-II

1. Turn ignition switch ON.
2. Select “DATA MONITOR” mode with CONSULT-II.
3. Wait at least 10 seconds.
4. Press MAIN switch for at least 10 seconds, then release it and wait at least 10 seconds.
5. Press CANCEL switch for at least 10 seconds, then release it and wait at least 10 seconds.
6. Press RESUME/ACCELERATE switch for at least 10 seconds, then release it and wait at least 10 seconds.
7. Press SET/COAST switch for at least 10 seconds, then release it and wait at least 10 seconds.
8. If DTC is detected, check possible cause items.

WITHOUT CONSULT-II

1. Turn ignition switch ON and wait at least 10 seconds.
2. Press MAIN switch for at least 10 seconds, then release it and wait at least 10 seconds.
3. Press CANCEL switch for at least 10 seconds, then release it and wait at least 10 seconds.
4. Press RESUME/ACCELERATE switch for at least 10 seconds, then release it and wait at least 10 seconds.
5. Press SET/COAST switch for at least 10 seconds, then release it and wait at least 10 seconds.
6. Turn ignition switch OFF, wait at least 10 seconds and then turn ON.
7. Perform Diagnostic Test Mode II (Self-diagnostic results) with ECM.
8. If DTC is detected, check possible cause items.

Wiring Diagram
LHD MODELS

ABS00GYG

EC-ASC/SW-01

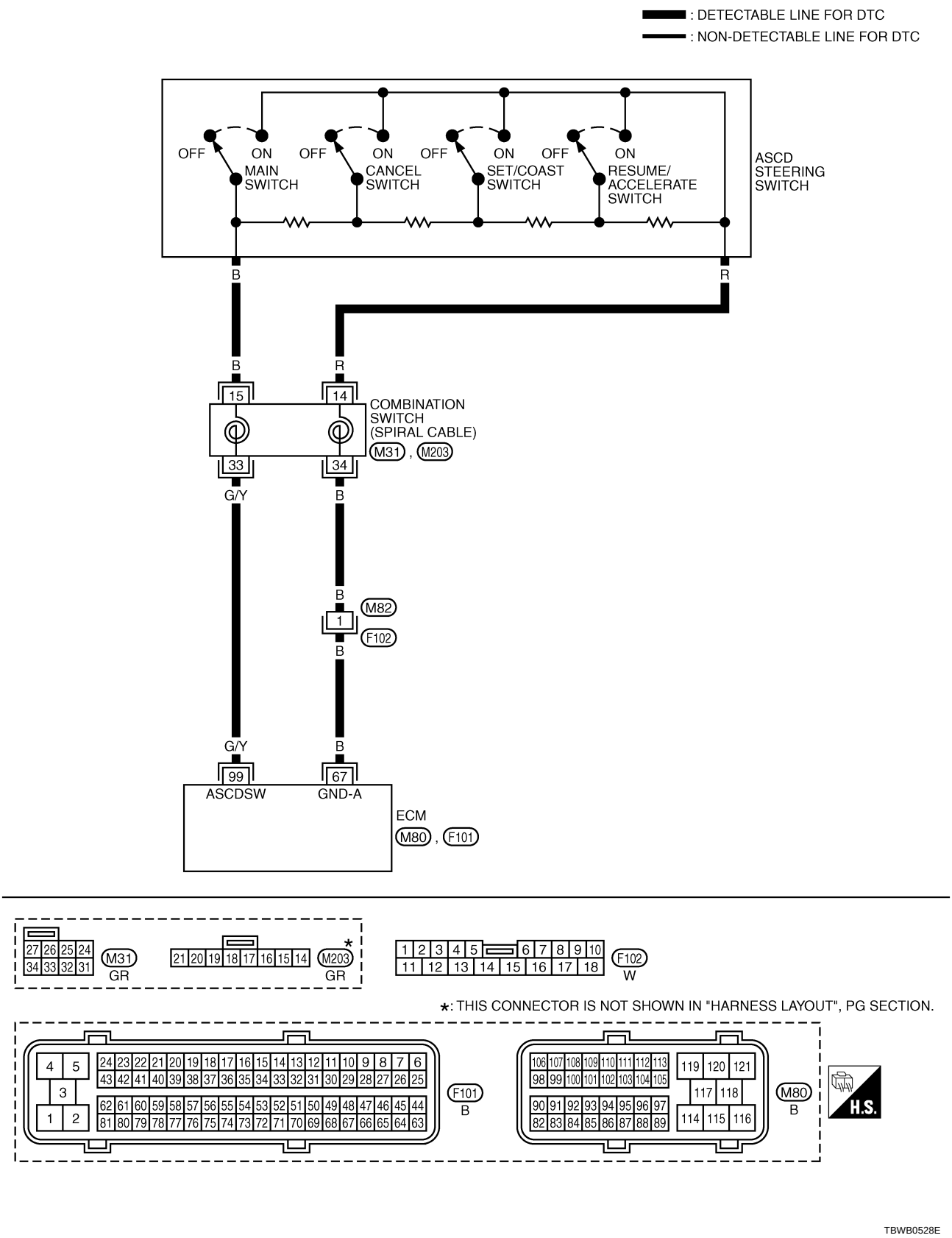

TBWB0528E

DTC P1572 ASCD BRAKE SWITCH

PFP:25320

Component Description

ABS00GYJ

When the brake pedal is depressed, ASCD brake switch is turned OFF and stop lamp switch is turned ON. ECM detects the state of the brake pedal by this input of two kinds (ON/OFF signal).

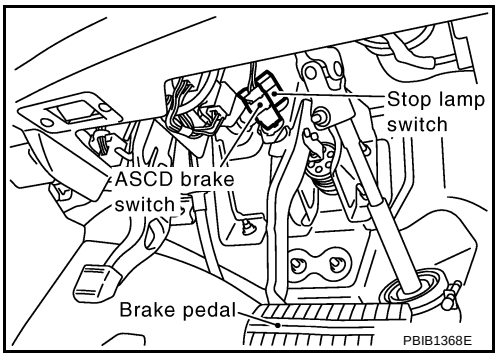

CONSULT-II Reference Value in Data Monitor Mode

ABS00GYK

Specification data are reference values.

MONITOR ITEM	CONDITION		SPECIFICATION
BRAKE SW1 (ASCD brake switch)	● Ignition switch: ON	Brake pedal: Fully released	ON
		Brake pedal: Slightly depressed	OFF
BRAKE SW2 (Stop lamp switch)	● Ignition switch: ON	Brake pedal: Fully released	OFF
		Brake pedal: Slightly depressed	ON

On Board Diagnosis Logic

ABS00GYL

This self-diagnosis has the one trip detection logic.
The MIL will not light up for this diagnosis.

NOTE:

- **If DTC P1572 is displayed with DTC P0605, first perform the trouble diagnosis for DTC P0605. Refer to EC-394 .**
- **This self-diagnosis has the one trip detection logic. When malfunction A is detected, DTC is not stored in ECM memory. And in that case, 1st trip DTC and 1st trip freeze frame data are displayed. 1st trip DTC is erased when ignition switch OFF. And even when malfunction A is detected in two consecutive trips, DTC is not stored in ECM memory.**

DTC No.	Trouble Diagnosis Name		DTC Detecting Condition	Possible Cause
P1572 1572	ASCD brake switch	A)	● When the vehicle speed is above 30 km/h (19 MPH), ON signals from the stop lamp switch and the ASCD brake switch are sent to the ECM at the same time.	● Harness or connectors (The stop lamp switch circuit is shorted.) ● Harness or connectors (The ASCD brake switch circuit is shorted.) ● Stop lamp switch ● ASCD brake switch ● Incorrect stop lamp switch installation ● Incorrect ASCD brake switch installation ● ECM
		B)	● ASCD brake switch signal is not sent to ECM for extremely long time while the vehicle is driving	

DTC Confirmation Procedure

ABS00GYM

CAUTION:
Always drive vehicle at a safe speed.

NOTE:

- If DTC Confirmation Procedure has been previously conducted, always turn ignition switch OFF and wait at least 10 seconds before conducting the next test.
- Procedure for malfunction B is not described here. It takes extremely long time to complete procedure for malfunction B. By performing procedure for malfunction A, the incident that causes malfunction B can be detected.

WITH CONSULT-II

TESTING CONDITION:
Steps 4 and 5 may be conducted with the drive wheels lifted in the shop or by driving the vehicle. If a road test is expected to be easier, it is unnecessary to lift the vehicle.

1. Start engine (VDC switch OFF).
2. Select “DATA MONITOR” mode with CONSULT-II.
3. Press MAIN switch and make sure that CRUISE indicator lights up.
4. Drive the vehicle for at least 5 consecutive seconds under the following condition.

VHCL SPEED SE	More than 30 km/h (19 MPH)
Selector lever	Suitable position

If 1st trip DTC is detected, check possible cause items.
If 1st trip DTC is not detected, go to the following step.

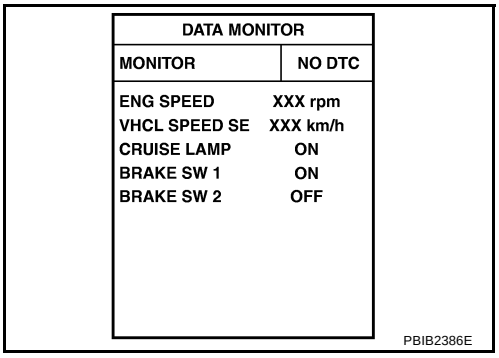

5. Drive the vehicle for at least 5 consecutive seconds under the following condition.

VHCL SPEED SE	More than 30 km/h (19 MPH)
Selector lever	Suitable position
Driving location	Depress the brake pedal for more than five seconds so as not to come off from the above-mentioned vehicle speed.

6. If 1st trip DTC is detected, check possible cause items.

Overall Function Check

ABS00GYN

Use this procedure to check the overall function of the ASCD brake switch circuit. During this check, a 1st trip DTC might not be confirmed.

WITHOUT CONSULT-II

1. Turn ignition switch ON.
2. Check voltage between ECM terminal 108 (ASCD brake switch signal) and ground under the following conditions.

CONDITION	VOLTAGE
Brake pedal: Slightly depressed	Approximately 0V
Brake pedal: Fully released	Battery voltage

3. If NG, check possible cause items.
If OK, go to next step.

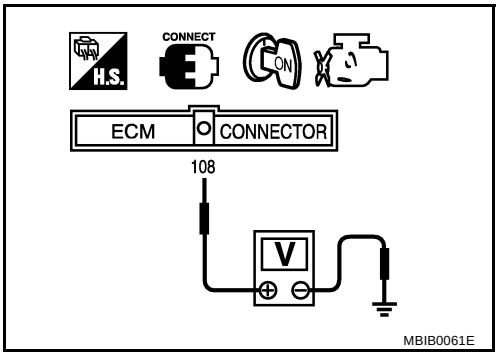

4. Check voltage between ECM terminal 101 (Stop lamp switch signal) and ground under the following conditions.

CONDITION	VOLTAGE
Brake pedal: Fully released	Approximately 0V
Brake pedal: Slightly depressed	Battery voltage

5. If NG, check possible cause items.

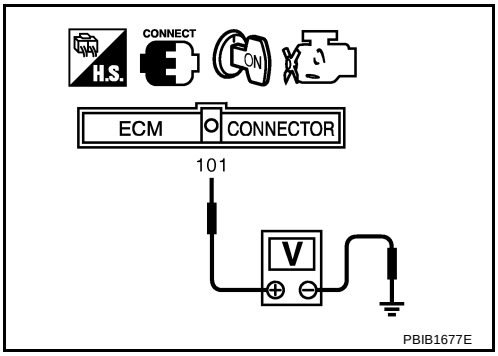

Wiring Diagram
LHD MODELS

ABS00GYO

EC-ASC/BS-01

: DETECTABLE LINE FOR DTC
: NON-DETECTABLE LINE FOR DTC

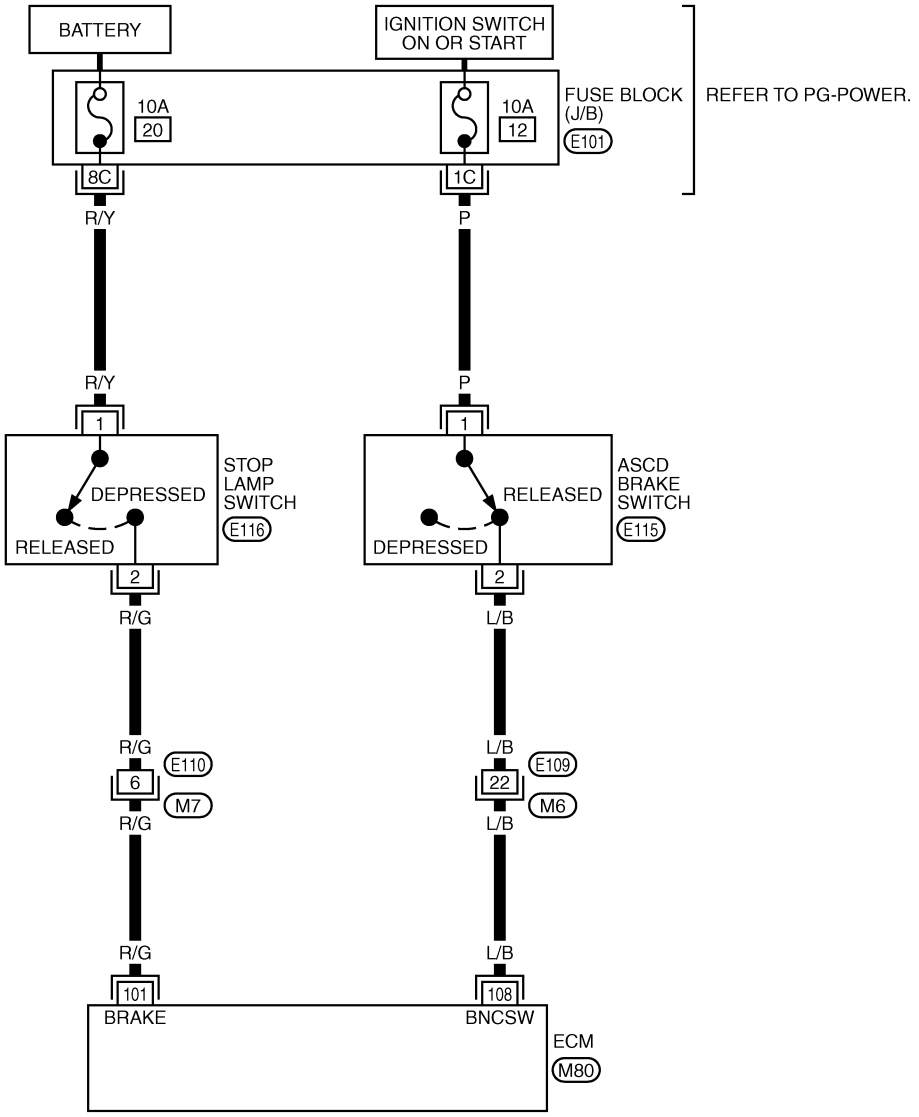

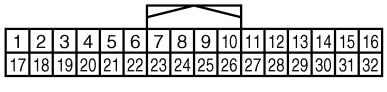

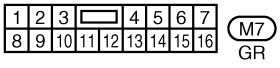

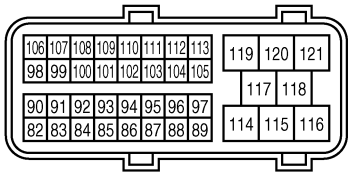

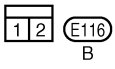

REFER TO THE FOLLOWING.
E101 -FUSE BLOCK-JUNCTION BOX (J/B)

TBWB0530E

DTC P1574 ASCD VEHICLE SPEED SENSOR

PFP:31036

Component Description

ABS00GYR

The ECM receives two vehicle speed sensor signals via CAN communication line. One is sent from “unified meter and A/C amp.”, and the other is from TCM (Transmission control module). The ECM uses these signals for ASCD control.

On Board Diagnosis Logic

ABS00GYS

This self-diagnosis has the one trip detection logic.
The MIL will not light up for this diagnosis.

NOTE:

- **If DTC P1574 is displayed with DTC U1000 or U1001, first perform the trouble diagnosis for DTC U1000, U1001. Refer to EC-352, "DTC U1000, U1001 CAN COMMUNICATION LINE" .**
- **If DTC P1574 is displayed with DTC P0605, first perform the trouble diagnosis for DTC P0605. Refer to EC-394, "DTC P0605 ECM"**

DTC No.	Trouble Diagnosis Name	DTC Detecting Condition	Possible Cause
P1574 1574	ASCD vehicle speed sensor	ECM detects a difference between two vehicle speed signals is out of the specified range.	● Harness or connectors (The CAN communication line is open or shorted.) (Refer to LAN-3, "Precautions When Using CONSULT-II") ● Unified meter and A/C amp. (Refer to DI-31, "UNIFIED METER AND A/C AMP") ● ABS actuator and electric unit (control unit) (Refer to BRC-5, "TROUBLE DIAGNOSIS" or BRC-25, "TROUBLE DIAGNOSIS") ● Wheel sensor ● TCM (Refer to CVT-23, "TROUBLE DIAGNOSIS") ● ECM

DTC Confirmation Procedure

ABS00GYT

CAUTION:
Always drive vehicle at a safe speed.

NOTE:
If DTC Confirmation Procedure has been previously conducted, always turn ignition switch OFF and wait at least 10 seconds before conducting the next test.

TESTING CONDITION:
Step 3 may be conducted with the drive wheels lifted in the shop or by driving the vehicle. If a road test is expected to be easier, it is unnecessary to lift the vehicle.

WITH CONSULT-II

1. Start engine (VDC switch OFF).
2. Select “DATA MONITOR” mode with CONSULT-II.
3. Drive the vehicle at more than 40 km/h (25 MPH).
4. If DTC is detected, check possible cause items.

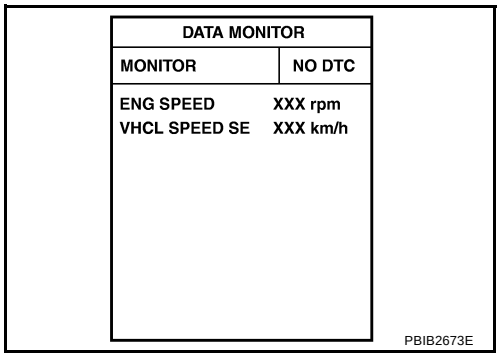

⊗ WITHOUT CONSULT-II

TESTING CONDITION:

Step 2 may be conducted with the drive wheels lifted in the shop or by driving the vehicle. If a road test is expected to be easier, it is unnecessary to lift the vehicle.

1. Start engine (VDC switch OFF).
2. Drive the vehicle at more than 40 km/h (25 MPH).
3. Turn ignition switch OFF, wait at least 10 seconds and then turn ON.
4. Perform Diagnostic Test Mode II (Self-diagnostic results) with ECM.
5. If DTC is detected, check possible cause items.

DTC P1700 CVT CONTROL SYSTEM

PFP:31036

Description

ABS00GYV

This DTC is displayed with other DTC regarding TCM. Perform the trouble diagnosis for displayed other DTC. Refer to CVT-23, "TROUBLE DIAGNOSIS" .
When this DTC is detected, the ASCD control is canceled.

DTC P1706 PNP SWITCH

PFP:32006

Component Description

ABS00GYW

When the gear position is P or N, park/neutral position (PNP) switch is ON.
ECM detects the position because the continuity of the line (the ON signal) exists.

CONSULT-II Reference Value in Data Monitor Mode

ABS00GYX

Specification data are reference values.

MONITOR ITEM	CONDITION		SPECIFICATION
P/N POSI SW	● Ignition switch: ON	Shift lever: P or N	ON
		Shift lever: Except above	OFF

On Board Diagnosis Logic

ABS00GYY

DTC No.	Trouble diagnosis name	DTC detecting condition	Possible cause
P1706 1706	Park/neutral position switch	The signal of the park/neutral position (PNP) switch is not changed in the process of engine starting and driving.	● Harness or connectors [The park/neutral position (PNP) switch circuit is open or shorted.] ● Park/neutral position (PNP) switch ● Unified meter and A/C amp. (Refer to LAN-3, "Precautions When Using CONSULT-II") ● TCM (Refer to CVT-23, "TROUBLE DIAGNOSIS")

DTC Confirmation Procedure

ABS00H33

CAUTION:
Always drive vehicle at a safe speed.

NOTE:
If DTC Confirmation Procedure has been previously conducted, always turn ignition switch OFF and wait at least 10 seconds before conducting the next test.

WITH CONSULT-II

1. Turn ignition switch ON.
2. Select “P/N POSI SW” in “DATA MONITOR” mode with CONSULT-II. Then check the “P/N POSI SW” signal under the following conditions.

Position (Selector lever)	Known-good signal
P or N position	ON
Except above position	OFF

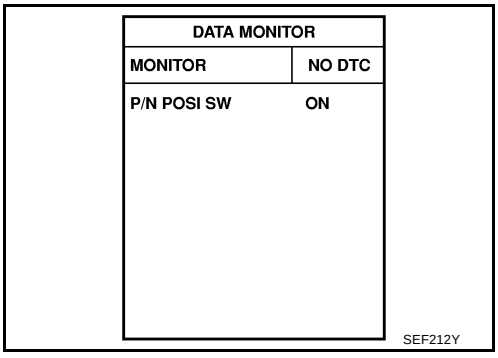

If NG, check possible cause items.
If OK, go to following step.

3. Select “DATA MONITOR” mode with CONSULT-II.
4. Start engine and warm it up to normal operating temperature.

5. Maintain the following conditions for at least 60 consecutive seconds.

ENG SPEED	1,100 - 6,375 rpm
COOLAN TEMP/S	More than 70°C (158°F)
B/FUEL SCHDL	4.0 - 31.8 msec
VHCL SPEED SE	More than 64 km/h (40 MPH)
Selector lever	Suitable position

6. If 1st trip DTC is detected, check possible cause items.

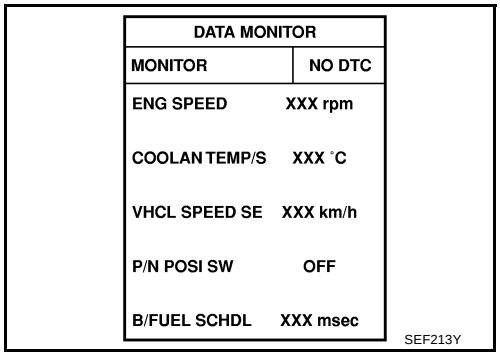

Overall Function Check

ABS00GYZ

Use this procedure to check the overall function of the park/neutral position (PNP) switch circuit. During this check, a 1st trip DTC might not be confirmed.

WITHOUT CONSULT-II

1. Turn ignition switch ON.
2. Check voltage between ECM terminal 102 (PNP switch signal) and ground under the following conditions.

Condition (Gear position)	Voltage V (Known-good data)
P or N position	Approx. 0
Except above position	BATTERY VOLTAGE (11 - 14V)

3. If NG, check possible cause items.

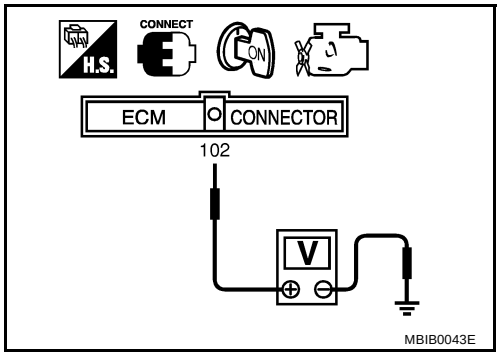

Wiring Diagram
LHD MODELS

ABS00GZ0

EC-PNP/SW-01

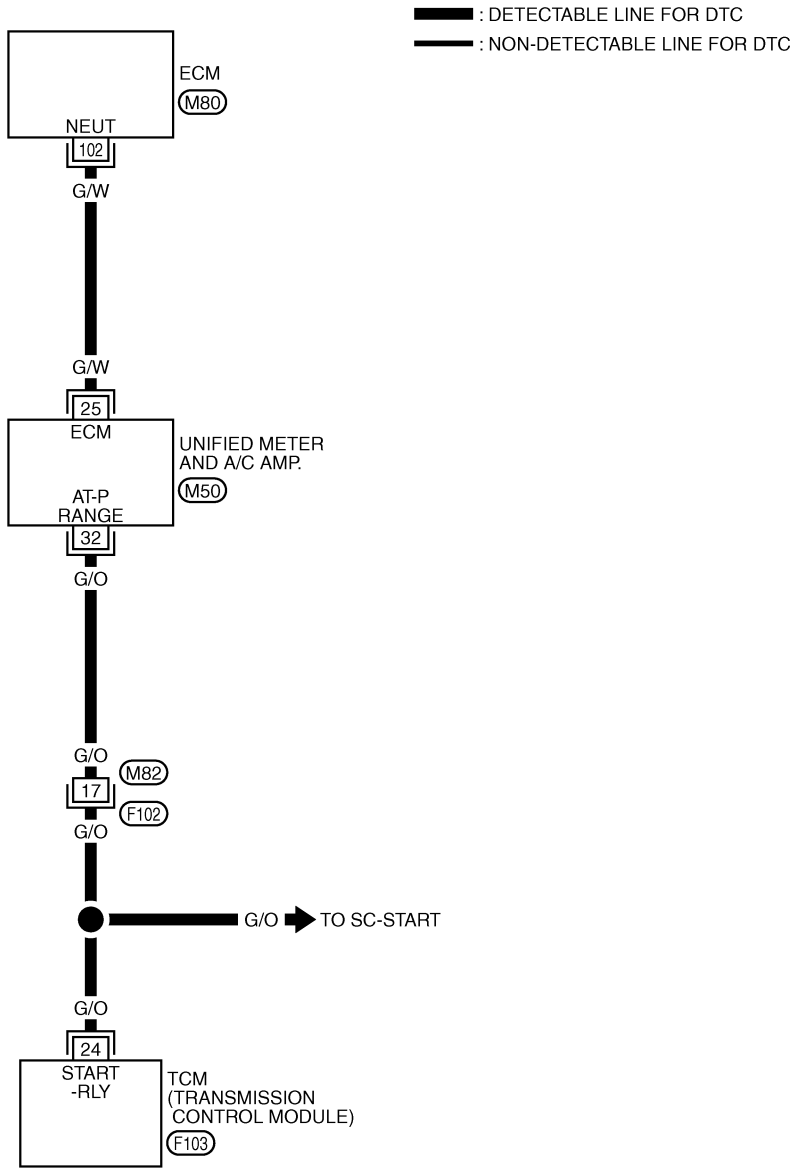

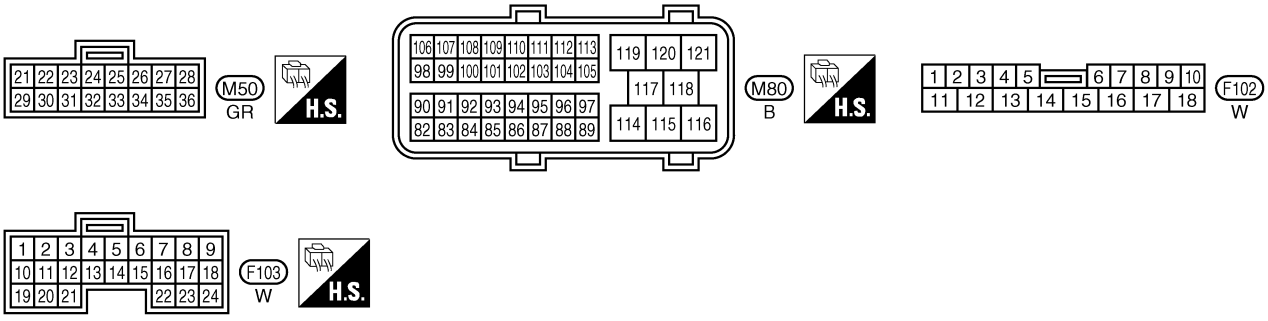

TBWA0385E

DTC P1715 INPUT SPEED SENSOR (PRIMARY SPEED SENSOR)

PFP:31935

Description

ABS00GZ2

ECM receives primary speed sensor signal from TCM through CAN communication line.

CONSULT-II Reference Value in Data Monitor Mode

ABS00GZ3

Specification data are reference values.

MONITOR ITEM	CONDITION	SPECIFICATION
I/P PULLY SPD	● Vehicle speed: More than 20 km/h (12MPH)	Almost the same speed as the tachometer indication

On Board Diagnosis Logic

ABS00GZ4

NOTE:

- **If DTC P1715 is displayed with DTC U1000 or U1001 first perform the trouble diagnosis for DTC U1000, U1001. Refer to EC-352 .**
- **If DTC P1715 is displayed with DTC P0605, first perform the trouble diagnosis for DTC P0605. Refer to EC-394 .**
- **If DTC P1715 is displayed with DTC P0335, first perform the trouble diagnosis for DTC P0335. Refer to EC-381 .**
- **If DTC P1715 is displayed with DTC P0340 or P0345, first perform the trouble diagnosis for DTC P0340, P0345. Refer to EC-385 .**

The MIL will not light up for this diagnosis.

DTC No.	Trouble diagnosis name	DTC detecting condition	Possible cause
P1715 1715	Input speed sensor (Primary speed sensor) (TCM output)	Primary speed sensor signal is different from the theoretical value calculated by ECM from secondary speed sensor signal and engine rpm signal.	● Harness or connectors (The CAN communication line is open or shorted) (Refer to LAN-3, "Precautions When Using CONSULT-II") ● Harness or connectors (Primary speed sensor circuit is open or shorted) ● TCM (Refer to CVT-23, "TROUBLE DIAGNOSIS")

DTC Confirmation Procedure

ABS00GZ5

CAUTION:

Always drive vehicle at a safe speed.

NOTE:

If DTC Confirmation Procedure has been previously conducted, always turn ignition switch OFF and wait at least 10 seconds before conducting the next test.

WITH CONSULT-II

1. Turn ignition switch ON.
2. Select “DATA MONITOR” mode with CONSULT-II.
3. Start engine.
4. Drive vehicle at a speed of more than 50 km/h (31 MPH) for at least 5 seconds.
5. If 1st trip DTC is detected, check possible cause items.

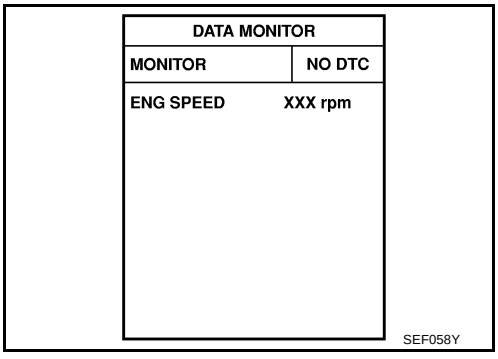

WITHOUT CONSULT-II

1. Start engine.
2. Drive vehicle at a speed of more than 50 km/h (31 MPH) for at least 5 seconds.
3. Stop the vehicle.
4. Turn ignition switch OFF, wait at least 10 seconds and then turn ON.
5. Perform Diagnostic Test Mode II (Self-diagnostic results) with ECM.
6. If 1st trip DTC is detected, check possible cause items.

DTC P1720 VSS

PFP:31036

Description

ABS00GZ7

NOTE:
If DTC P1720 is displayed with DTC U1000 or U1001, first perform the trouble diagnosis for DTC U1000, U1001. Refer to EC-352, "DTC U1000, U1001 CAN COMMUNICATION LINE" .
ECM receives two vehicle speed signals via CAN communication line. One is sent from “ABS actuator and electric unit (control unit)” via “unified meter and A/C amp.”, and the other is from TCM (Transmission control module). ECM uses these signals for engine control.

CONSULT-II Reference Value in Data Monitor Mode

ABS00GZ8

Specification data are reference values.

MONITOR ITEM	CONDITION	SPECIFICATION
VHCL SPEED SE	● Turn drive wheels and compare CONSULT-II value with the speedometer indication.	Almost the same speed as the speedometer indication

On Board Diagnosis Logic

ABS00GZ9

The MIL will not light up for this self-diagnosis.

DTC No.	Trouble diagnosis name	DTC detecting condition	Possible cause
P1720 1720	Vehicle speed sensor (TCM output)	A difference between two vehicle speed signals is out of the specified range.	● Harness or connectors (Secondary speed sensor circuit is open or shorted) ● Harness or connectors (Wheel sensor circuit is open or shorted.) ● TCM (Refer to CVT-23, "TROUBLE DIAGNOSIS") ● Secondary speed sensor ● ABS actuator and electric unit (control unit) (Refer to BRC-5, "TROUBLE DIAGNOSIS" or BRC-25, "TROUBLE DIAGNOSIS") ● Wheel sensor ● Unified meter and A/C amp. (Refer to DI-31, "UNIFIED METER AND A/C AMP")

DTC Confirmation Procedure

ABS00GZA

CAUTION:
Always drive vehicle at a safe speed.

NOTE:
If DTC Confirmation Procedure has been previously conducted, always turn ignition switch OFF and wait at least 10 seconds before conducting the next test.

WITH CONSULT-II

1. Turn ignition switch ON.
2. Select “DATA MONITOR” mode with CONSULT-II.
3. Start engine.
4. Drive vehicle at a speed of 20 km/h (12 MPH) or more for at least 5 seconds without brake pedal depressing.
5. If 1st trip DTC is detected, check possible cause items.

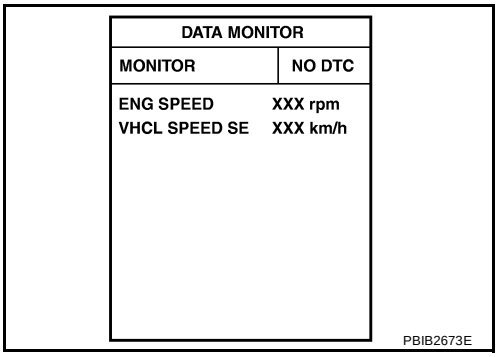

WITHOUT CONSULT-II

1. Start engine.
2. Drive vehicle at a speed of 20 km/h (12 MPH) or more for at least 5 seconds without brake pedal depressing.
3. Stop the vehicle.
4. Turn ignition switch OFF, wait at least 10 seconds and then turn ON.
5. Perform Diagnostic Test Mode II (Self-diagnostic results) with ECM.
6. If 1st trip DTC is detected, check possible cause items.

DTC P1805 BRAKE SWITCH

PFP:25320

Description

ABS00GZC

Brake switch signal is applied to the ECM through the stop lamp switch when the brake pedal is depressed. This signal is used mainly to decrease the engine speed when the vehicle is driving.

CONSULT-II Reference Value in Data Monitor Mode

ABS00GZD

Specification data are reference values.

MONITOR ITEM	CONDITION		SPECIFICATION
BRAKE SW	● Ignition switch: ON	Brake pedal: Fully released	OFF
		Brake pedal: Slightly depressed	ON

On Board Diagnosis Logic

ABS00GZE

This self-diagnosis has the one trip detection logic.

DTC No.	Trouble diagnosis name	DTC detecting condition	Possible cause
P1805 1805	Brake switch	A brake switch signal is not sent to ECM for extremely long time while the vehicle is driving.	● Harness or connectors (Stop lamp switch circuit is open or shorted.) ● Stop lamp switch

FAIL-SAFE MODE

When the malfunction is detected, the ECM enters fail-safe mode and the MIL light up.

Engine operating condition in fail-safe mode	
ECM controls the electric throttle control actuator by regulating the throttle opening to a small range. Therefore, acceleration will be poor.	
Vehicle condition	Driving condition
When engine is idling	Normal
When accelerating	Poor acceleration

DTC Confirmation Procedure

ABS00GZF

WITH CONSULT-II

1. Turn ignition switch ON.
2. Fully depress the brake pedal for at least 5 seconds.
3. Erase the DTC with CONSULT-II.
4. Select “DATA MONITOR” mode with CONSULT-II.
5. If DTC is detected, check possible cause items.

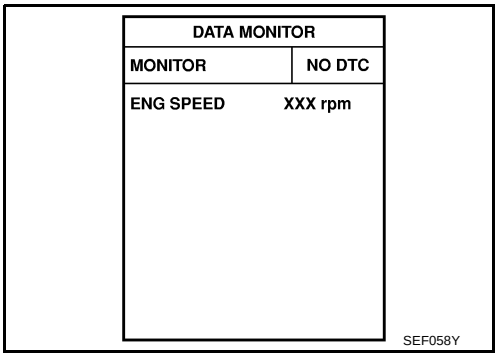

WITHOUT CONSULT-II

1. Turn ignition switch ON.
2. Fully depress the brake pedal for at least 5 seconds.
3. Turn ignition switch OFF, wait at least 10 seconds and then turn ON.
4. Erase the Diagnostic Test Mode II (Self-diagnostic results) memory.
5. Turn ignition switch OFF, wait at least 10 seconds and then turn ON.
6. Perform Diagnostic Test Mode II (Self-diagnostic results) with ECM.

7. If DTC is detected, check possible cause items.

Wiring Diagram
LHD MODELS

ABS00GZG

EC-BRK/SW-01

: DETECTABLE LINE FOR DTC
: NON-DETECTABLE LINE FOR DTC

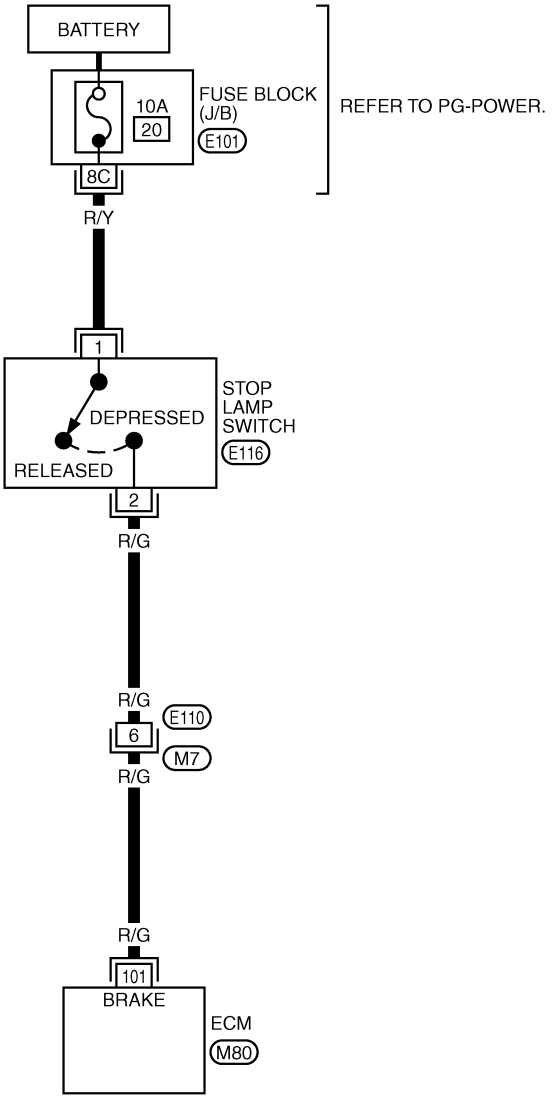

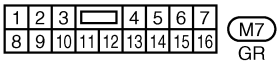

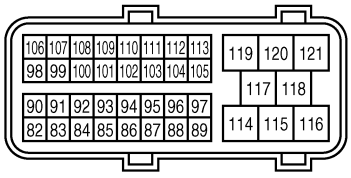

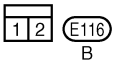

REFER TO THE FOLLOWING.
E101 -FUSE BLOCK-JUNCTION BOX (J/B)

TBWA0386E

DTC P2122, P2123 APP SENSOR

PFP:18002

Component Description

ABS00GZJ

The accelerator pedal position sensor is installed on the upper end of the accelerator pedal assembly. The sensor detects the accelerator position and sends a signal to the ECM.
Accelerator pedal position sensor has two sensors. These sensors are a kind of potentiometers which transform the accelerator pedal position into output voltage, and emit the voltage signal to the ECM. In addition, these sensors detect the opening and closing speed of the accelerator pedal and feed the voltage signals to the ECM. The ECM judges the current opening angle of the accelerator pedal from these signals and controls the throttle control motor based on these signals.

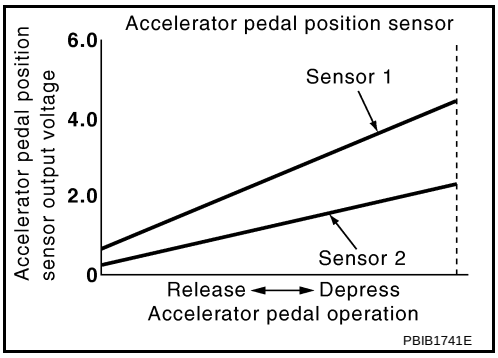

Idle position of the accelerator pedal is determined by the ECM receiving the signal from the accelerator pedal position sensor. The ECM uses this signal for the engine operation such as fuel cut.

CONSULT-II Reference Value in Data Monitor Mode

ABS00GZK

Specification data are reference values.

MONITOR ITEM	CONDITION		SPECIFICATION
ACCEL SEN 1 ACCEL SEN 2*	● Ignition switch: ON (Engine stopped)	Accelerator pedal: Fully released	0.5 - 1.0V
		Accelerator pedal: Fully depressed	4.2 - 4.8V
CLSD THL POS	● Ignition switch: ON (Engine stopped)	Accelerator pedal: Fully released	ON
		Accelerator pedal: Slightly depressed	OFF

*: Accelerator pedal position sensor 2 signal is converted by ECM internally. Thus, it differ from ECM terminal voltage.

On Board Diagnosis Logic

ABS00GZL

These self-diagnoses have the one trip detection logic.

NOTE:
If DTC P2122 or P2123 is displayed with DTC P1229, first perform the trouble diagnosis for DTC P1229. Refer to EC-436 .

DTC No.	Trouble diagnosis name	DTC detecting condition	Possible cause
P2122 2122	Accelerator pedal position sensor 1 circuit low input	An excessively low voltage from the APP sensor 1 is sent to ECM.	● Harness or connectors (APP sensor 1 circuit is open or shorted.) ● Accelerator pedal position sensor (APP sensor 1)
P2123 2123	Accelerator pedal position sensor 1 circuit high input	An excessively high voltage from the APP sensor 1 is sent to ECM.	

FAIL-SAFE MODE

When the malfunction is detected, ECM enters fail-safe mode and the MIL lights up.

Engine operating condition in fail-safe mode
The ECM controls the electric throttle control actuator in regulating the throttle opening in order for the idle position to be within +10 degrees. The ECM regulates the opening speed of the throttle valve to be slower than the normal condition. So, the acceleration will be poor.

DTC Confirmation Procedure

ABS00GZM

NOTE:
If DTC Confirmation Procedure has been previously conducted, always turn ignition switch OFF and wait at least 10 seconds before conducting the next test.
TESTING CONDITION:
Before performing the following procedure, confirm that battery voltage is more than 10V at idle.

WITH CONSULT-II

1. Turn ignition switch ON.
2. Select “DATA MONITOR” mode with CONSULT-II.
3. Start engine and let it idle for 1 second.
4. If DTC is detected, check possible cause items.

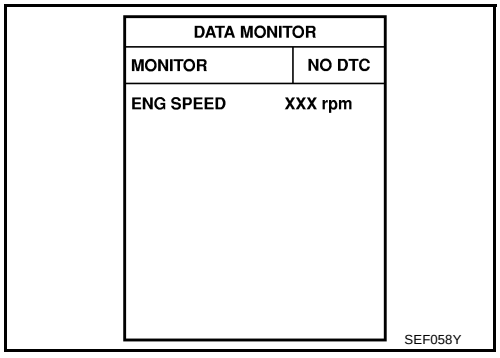

WITHOUT CONSULT-II

1. Start engine and let it idle for 1 second.
2. Turn ignition switch OFF, wait at least 10 seconds and then turn ON.
3. Perform Diagnostic Test Mode II (Self-diagnostic results) with ECM.
4. If DTC is detected, check possible cause items.

Wiring Diagram
LHD MODELS

ABS00GZN

EC-APPS1-01

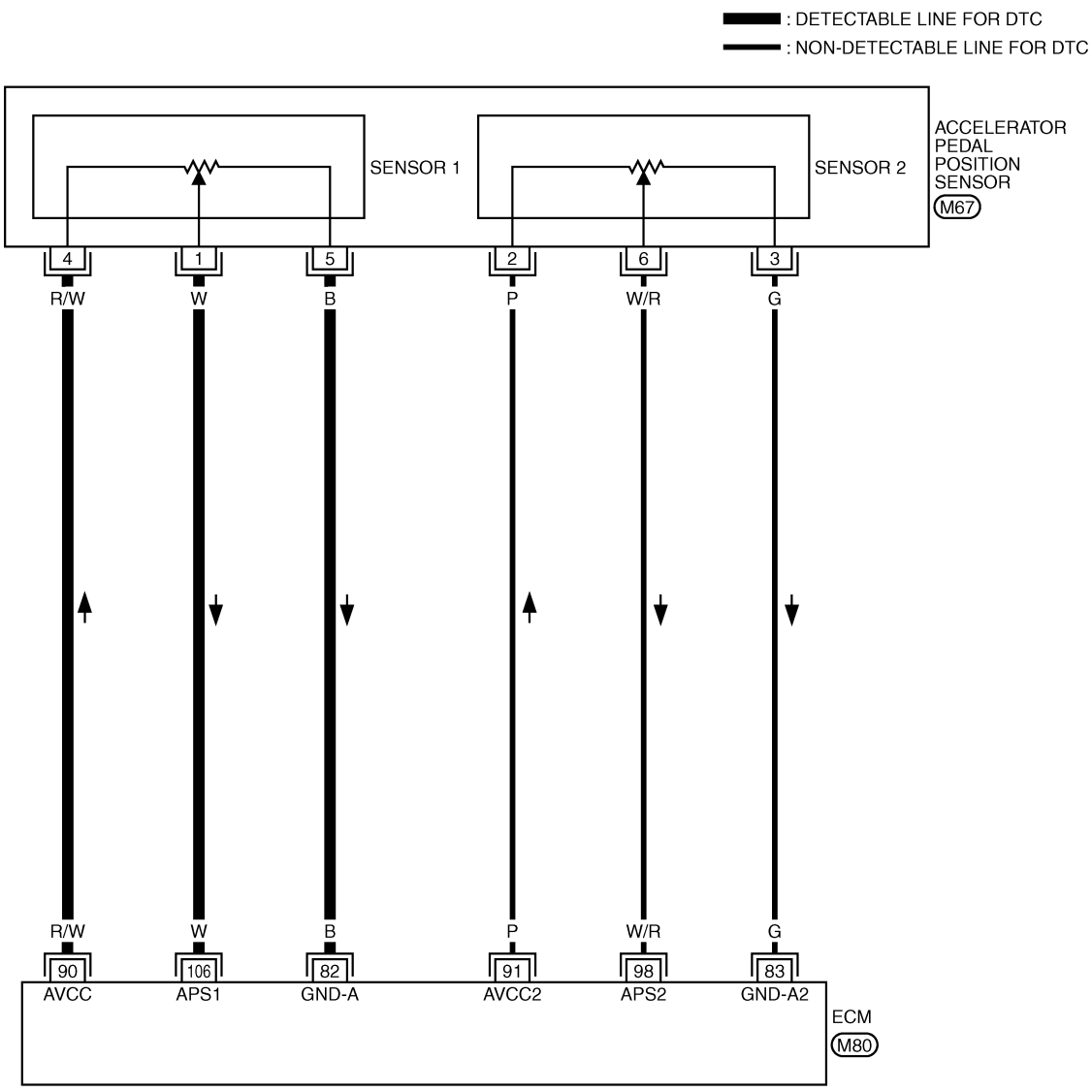

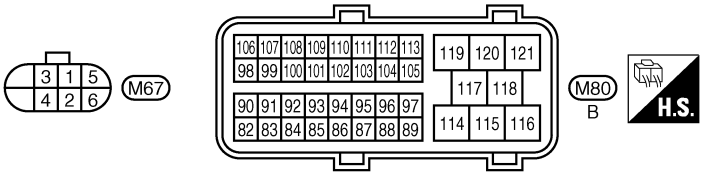

TBWA0717E

DTC P2127, P2128 APP SENSOR

PFP:18002

Component Description

ABS00GZR

The accelerator pedal position sensor is installed on the upper end of the accelerator pedal assembly. The sensor detects the accelerator position and sends a signal to the ECM.
Accelerator pedal position sensor has two sensors. These sensors are a kind of potentiometers which transform the accelerator pedal position into output voltage, and emit the voltage signal to the ECM. In addition, these sensors detect the opening and closing speed of the accelerator pedal and feed the voltage signals to the ECM. The ECM judges the current opening angle of the accelerator pedal from these signals and controls the throttle control motor based on these signals.

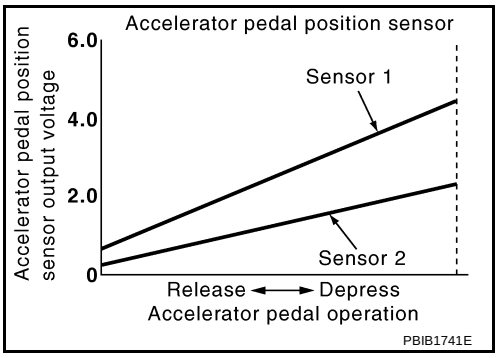

Idle position of the accelerator pedal is determined by the ECM receiving the signal from the accelerator pedal position sensor. The ECM uses this signal for the engine operation such as fuel cut.

CONSULT-II Reference Value in Data Monitor Mode

ABS00GZS

Specification data are reference values.

MONITOR ITEM	CONDITION		SPECIFICATION
ACCEL SEN 1 ACCEL SEN 2*	● Ignition switch: ON (Engine stopped)	Accelerator pedal: Fully released	0.5 - 1.0V
		Accelerator pedal: Fully depressed	4.2 - 4.8V
CLSD THL POS	● Ignition switch: ON (Engine stopped)	Accelerator pedal: Fully released	ON
		Accelerator pedal: Slightly depressed	OFF

*: Accelerator pedal position sensor 2 signal is converted by ECM internally. Thus, it differ from ECM terminal voltage.

On Board Diagnosis Logic

ABS00GZT

These self-diagnoses have the one trip detection logic.

DTC No.	Trouble diagnosis name	DTC detecting condition	Possible cause
P2127 2127	Accelerator pedal position sensor 2 circuit low input	An excessively low voltage from the APP sensor 2 is sent to ECM.	● Harness or connectors (APP sensor 2 circuit is open or shorted.) (TP sensor circuit is shorted.) ● Accelerator pedal position sensor (APP sensor 2) ● Electric throttle control actuator (TP sensor 1 and 2)
P2128 2128	Accelerator pedal position sensor 2 circuit high input	An excessively high voltage from the APP sensor 2 is sent to ECM.	

FAIL-SAFE MODE

When the malfunction is detected, ECM enters fail-safe mode and the MIL lights up.

Engine operating condition in fail-safe mode
The ECM controls the electric throttle control actuator in regulating the throttle opening in order for the idle position to be within +10 degrees. The ECM regulates the opening speed of the throttle valve to be slower than the normal condition. So, the acceleration will be poor.

DTC Confirmation Procedure

ABS00GZU

NOTE:
If DTC Confirmation Procedure has been previously conducted, always turn ignition switch OFF and wait at least 10 seconds before conducting the next test.
TESTING CONDITION:
Before performing the following procedure, confirm that battery voltage is more than 10V at idle.

WITH CONSULT-II

1. Turn ignition switch ON.
2. Select “DATA MONITOR” mode with CONSULT-II.
3. Start engine and let it idle for 1 second.
4. If DTC is detected, check possible cause items.

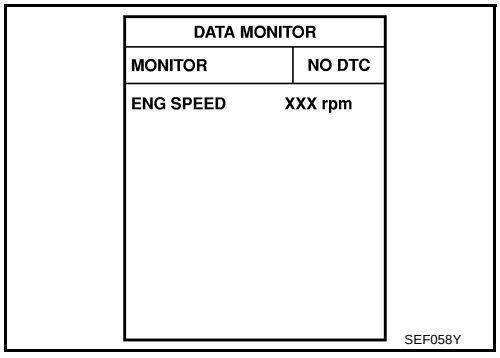

WITHOUT CONSULT-II

1. Start engine and let it idle for 1 second.
2. Turn ignition switch OFF, wait at least 10 seconds and then turn ON.
3. Perform Diagnostic Test Mode II (Self-diagnostic results) with ECM.
4. If DTC is detected, check possible cause items.

Wiring Diagram
LHD MODELS

ABS00GZV

EC-APPS2-01

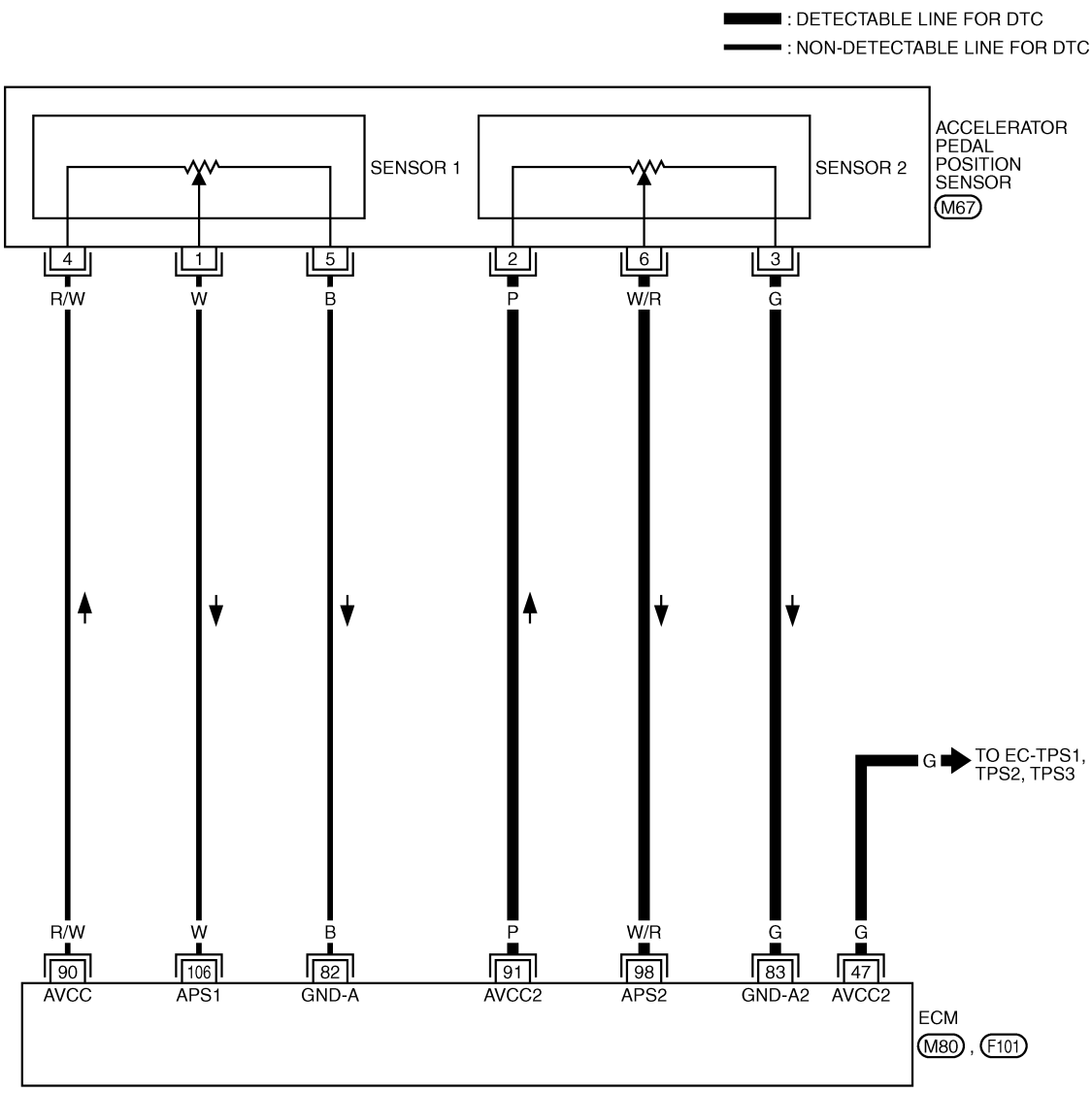

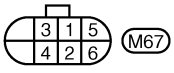

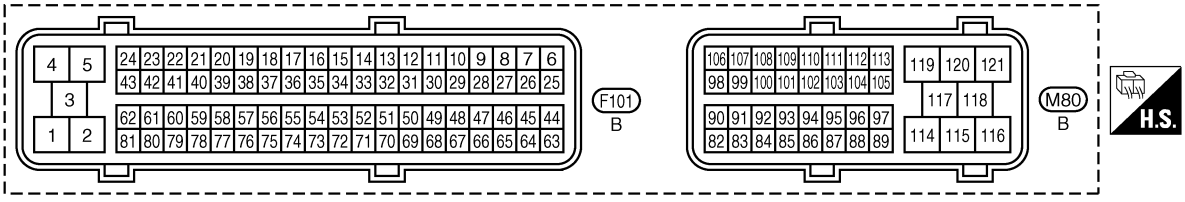

TBWA0718E

DTC P2135 TP SENSOR

PFP:16119

Component Description

ABS00GZZ

Electric throttle control actuator consists of throttle control motor, throttle position sensor, etc. The throttle position sensor responds to the throttle valve movement.
The throttle position sensor has the two sensors. These sensors are a kind of potentiometers which transform the throttle valve position into output voltage, and emit the voltage signal to the ECM. In addition, these sensors detect the opening and closing speed of the throttle valve and feed the voltage signals to the ECM. The ECM judges the current opening angle of the throttle valve from these signals and the ECM controls the throttle control motor to make the throttle valve opening angle properly in response to driving condition.

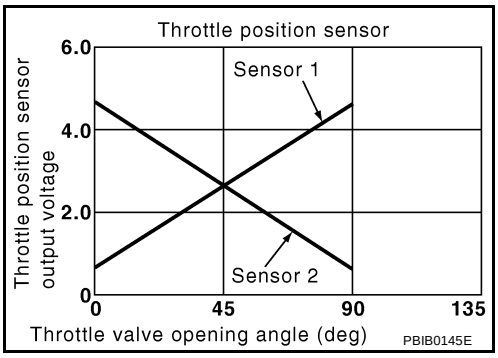

CONSULT-II Reference Value in Data Monitor Mode

ABS00H00

Specification data are reference values.

MONITOR ITEM	CONDITION		SPECIFICATION
THRTL SEN 1 THRTL SEN 2*	● Ignition switch: ON (Engine stopped) ● Shift lever: D	Accelerator pedal: Fully released	More than 0.36V
		Accelerator pedal: Fully depressed	Less than 4.75V

*: Throttle position sensor 2 signal is converted by ECM internally. Thus, it differ from ECM terminal voltage signal.

On Board Diagnosis Logic

ABS00H01

This self-diagnosis has the one trip detection logic.

DTC No.	Trouble diagnosis name	DTC detecting condition	Possible cause
P2135 2135	Throttle position sensor circuit range/performance problem	Rationally incorrect voltage is sent to ECM compared with the signals from TP sensor 1 and TP sensor 2.	● Harness or connector (TP sensor 1 and 2 circuit is open or shorted.) (APP sensor 2 circuit is shorted) ● Electric throttle control actuator (TP sensor 1 and 2) ● Accelerator pedal position sensor (APP sensor 2)

FAIL-SAFE MODE

When the malfunction is detected, the ECM enters fail-safe mode and the MIL lights up.

Engine operation condition in fail-safe mode
The ECM controls the electric throttle control actuator in regulating the throttle opening in order for the idle position to be within +10 degrees. The ECM regulates the opening speed of the throttle valve to be slower than the normal condition. So, the acceleration will be poor.

DTC Confirmation Procedure

ABS00H02

NOTE:
If DTC Confirmation Procedure has been previously conducted, always turn ignition switch OFF and wait at least 10 seconds before conducting the next test.
TESTING CONDITION:
Before performing the following procedure, confirm that battery voltage is more than 10V at idle.

WITH CONSULT-II

1. Turn ignition switch ON.
2. Select “DATA MONITOR” mode with CONSULT-II.
3. Start engine and let it idle for 1 second.
4. If DTC is detected, check possible cause items.

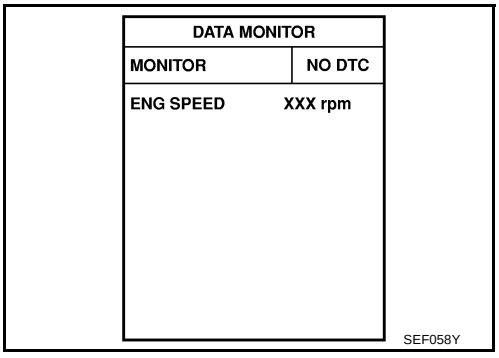

WITHOUT CONSULT-II

1. Start engine and let it idle for 1 second.
2. Turn ignition switch OFF, wait at least 10 seconds and then turn ON.
3. Perform Diagnostic Test Mode II (Self-diagnostic results) with ECM.
4. If DTC is detected, check possible cause items.

Wiring Diagram
LHD MODELS

ABS00H03

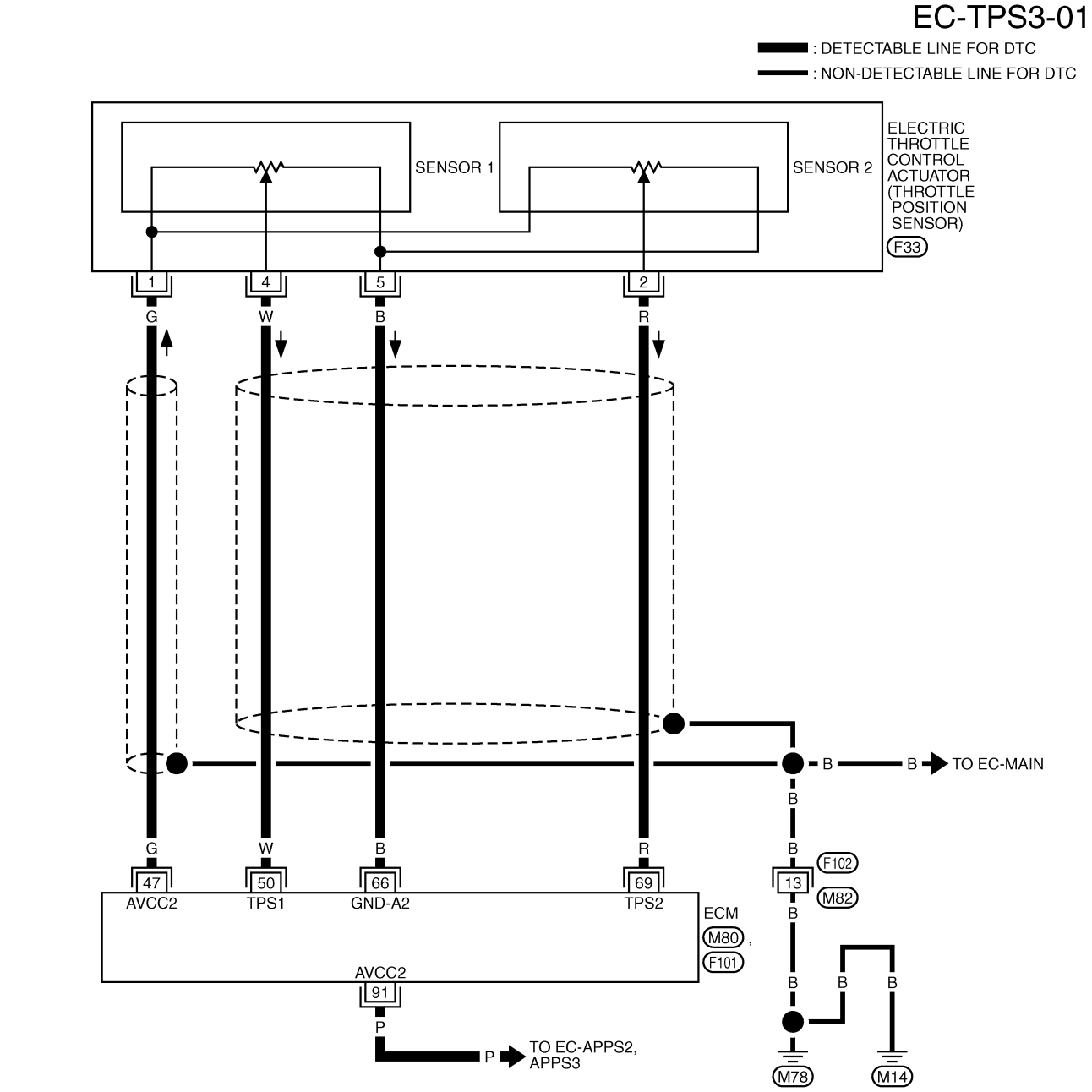

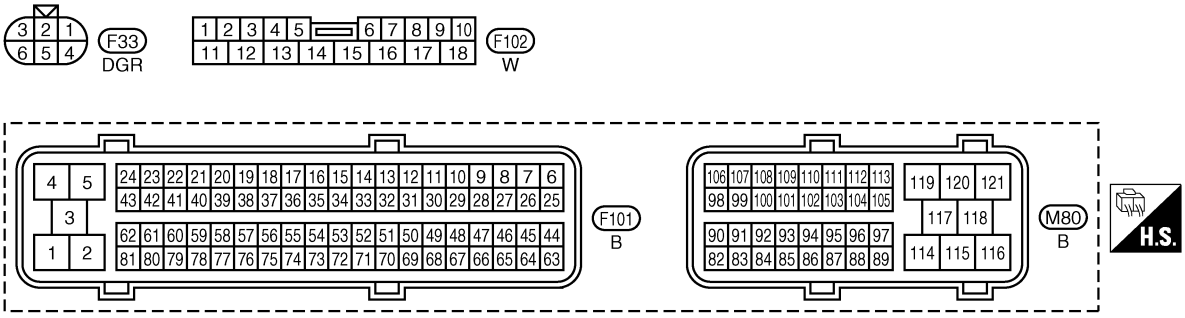

TBWA0715E

DTC P2138 APP SENSOR

PFP:18002

Component Description

ABS00H07

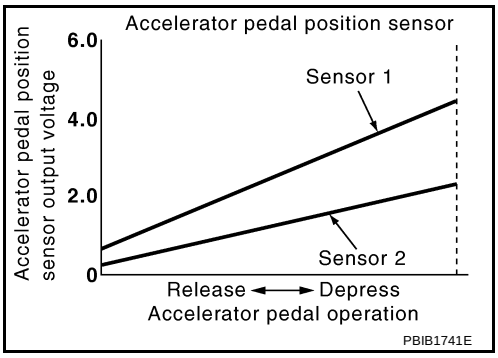

The accelerator pedal position sensor is installed on the upper end of the accelerator pedal assembly. The sensor detects the accelerator position and sends a signal to the ECM.
Accelerator pedal position sensor has two sensors. These sensors are a kind of potentiometers which transform the accelerator pedal position into output voltage, and emit the voltage signal to the ECM. In addition, these sensors detect the opening and closing speed of the accelerator pedal and feed the voltage signals to the ECM. The ECM judges the current opening angle of the accelerator pedal from these signals and controls the throttle control motor based on these signals.
Idle position of the accelerator pedal is determined by the ECM receiving the signal from the accelerator pedal position sensor. The ECM uses this signal for the engine operation such as fuel cut.

CONSULT-II Reference Value in Data Monitor Mode

ABS00H08

Specification data are reference values.

MONITOR ITEM	CONDITION		SPECIFICATION
ACCEL SEN 1 ACCEL SEN 2*	● Ignition switch: ON (Engine stopped)	Accelerator pedal: Fully released	0.5 - 1.0V
		Accelerator pedal: Fully depressed	4.2 - 4.8V
CLSD THL POS	● Ignition switch: ON (Engine stopped)	Accelerator pedal: Fully released	ON
		Accelerator pedal: Slightly depressed	OFF

*: Accelerator pedal position sensor 2 signal is converted by ECM internally. Thus, it differ from ECM terminal voltage.

On Board Diagnosis Logic

ABS00H09

This self-diagnosis has the one trip detection logic.

NOTE:
If DTC P2138 is displayed with DTC P1229, first perform the trouble diagnosis for DTC P1229. Refer to EC-436 .

DTC No.	Trouble diagnosis name	DTC detecting condition	Possible cause
P2138 2138	Accelerator pedal position sensor circuit range/performance problem	Rationally incorrect voltage is sent to ECM compared with the signals from APP sensor 1 and APP sensor 2.	● Harness or connector (APP sensor 1 and 2 circuit is open or shorted.) (TP sensor circuit is shorted) ● Accelerator pedal position sensor (APP sensor 1 and 2) ● Electric throttle control actuator (TP sensor 1 and 2)

FAIL-SAFE MODE

When the malfunction is detected, ECM enters fail-safe mode and the MIL lights up.

Engine operating condition in fail-safe mode
The ECM controls the electric throttle control actuator in regulating the throttle opening in order for the idle position to be within +10 degrees. The ECM regulates the opening speed of the throttle valve to be slower than the normal condition. So, the acceleration will be poor.

DTC Confirmation Procedure

ABS00H0A

NOTE:
If DTC Confirmation Procedure has been previously conducted, always turn ignition switch OFF and wait at least 10 seconds before conducting the next test.
TESTING CONDITION:
Before performing the following procedure, confirm that battery voltage is more than 10V at idle.

WITH CONSULT-II

1. Turn ignition switch ON.
2. Select “DATA MONITOR” mode with CONSULT-II.
3. Start engine and let it idle for 1 second.
4. If DTC is detected, check possible cause items.

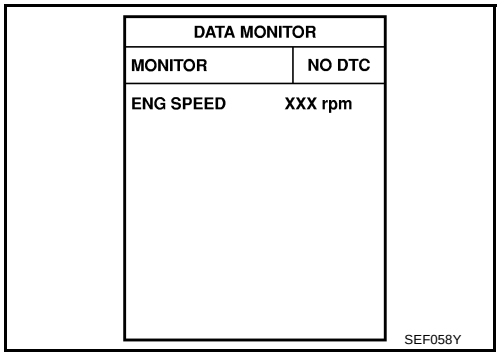

WITHOUT CONSULT-II

1. Start engine and let it idle for 1 second.
2. Turn ignition switch OFF, wait at least 10 seconds and then turn ON.
3. Perform Diagnostic Test Mode II (Self-diagnostic results) with ECM.
4. If DTC is detected, check possible cause items.

Wiring Diagram
LHD MODELS

ABS00H0B

EC-APPS3-01

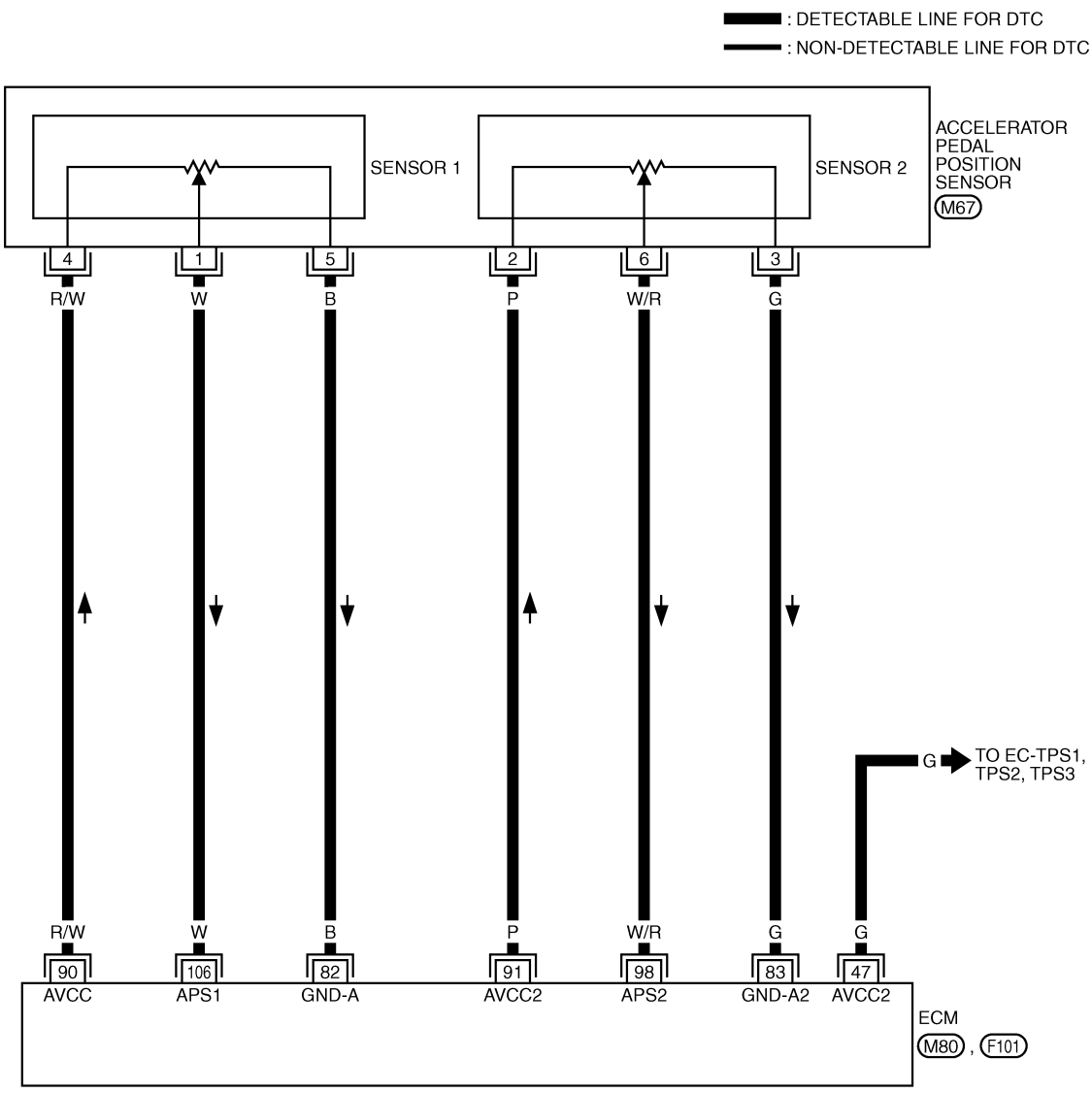

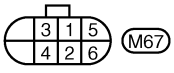

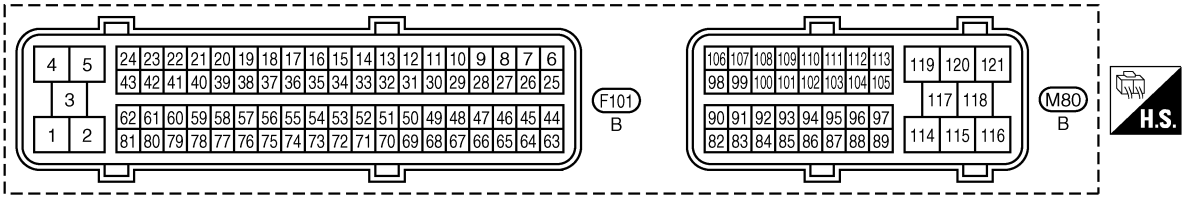

TBWA0716E

HO2S2 HEATER

PFP:226A0

Wiring Diagram —LHD Models—
BANK 1

ABS00H0H

EC-RRO2B1-01

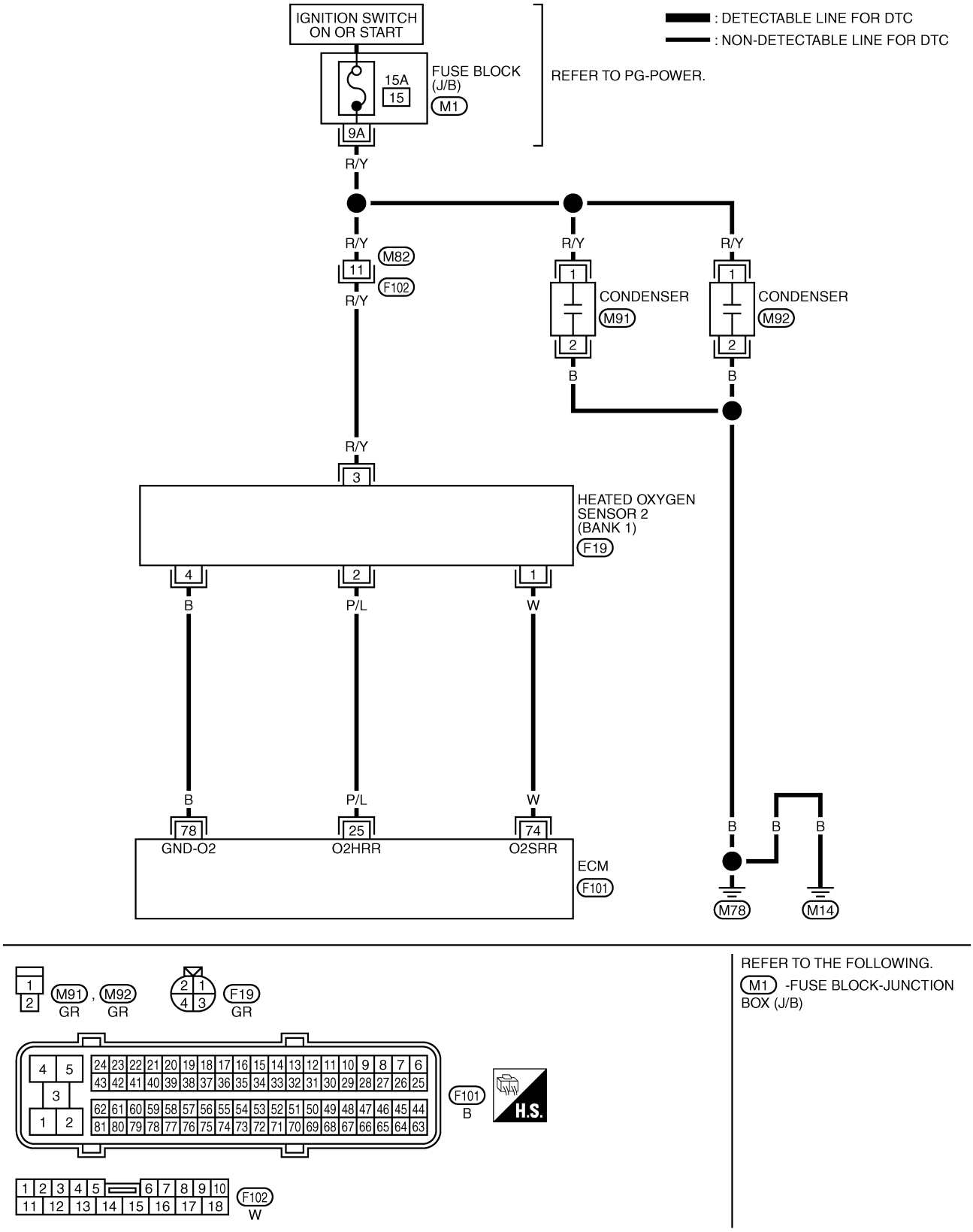

BANK 2

EC-RRO2B2-01

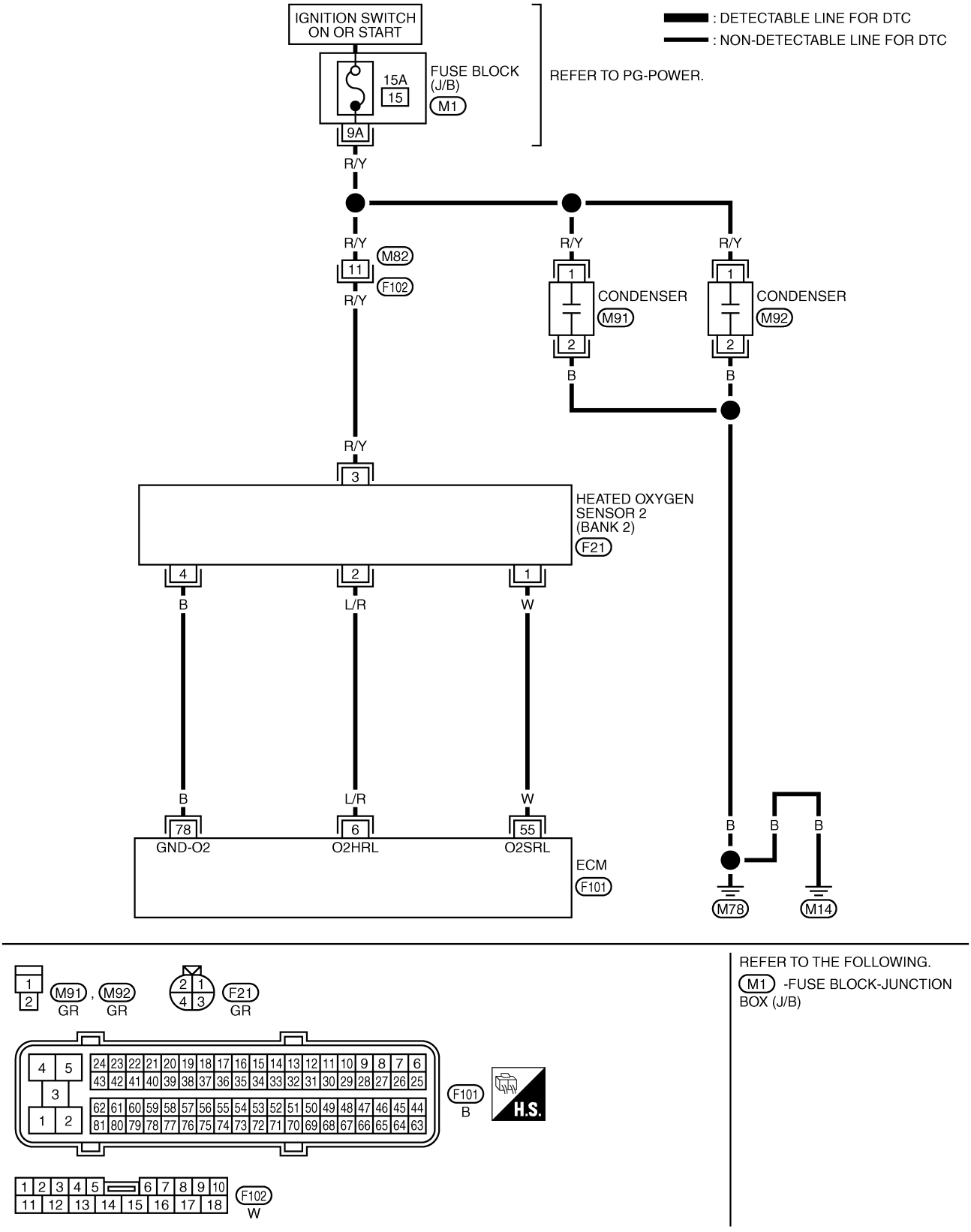

IAT SENSOR

PFP:22630

Wiring Diagram
LHD MODELS

ABS00H0M

EC-IATSEN-01

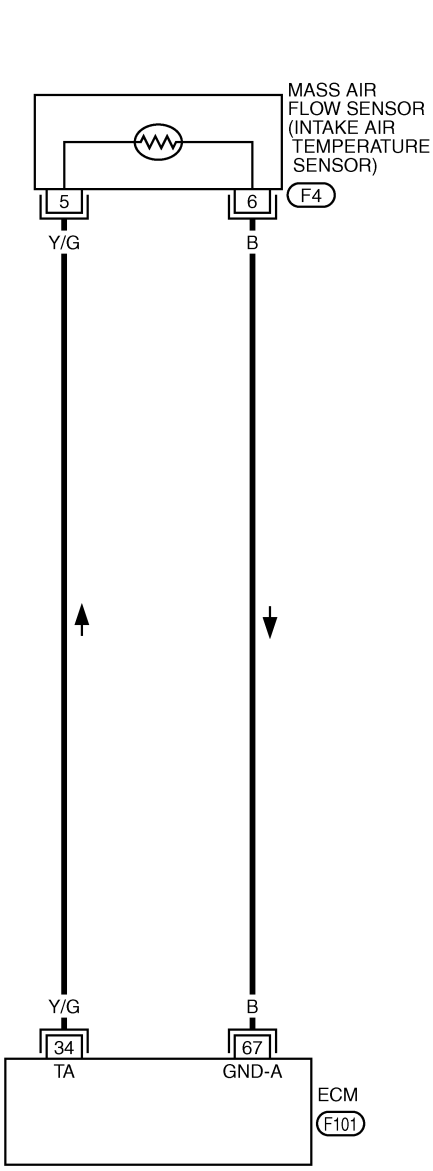

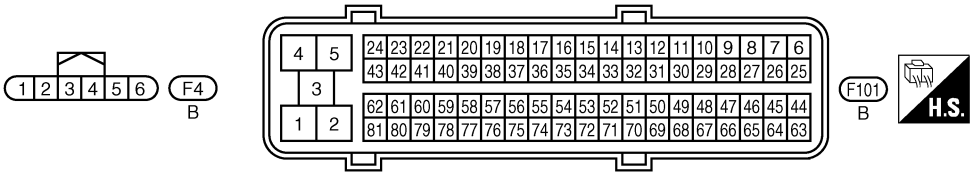

TBWA0420E

HO2S2

PFP:226A0

Wiring Diagram —LHD Models—
BANK 1

ABS00H0S

EC-RRO2B1-01

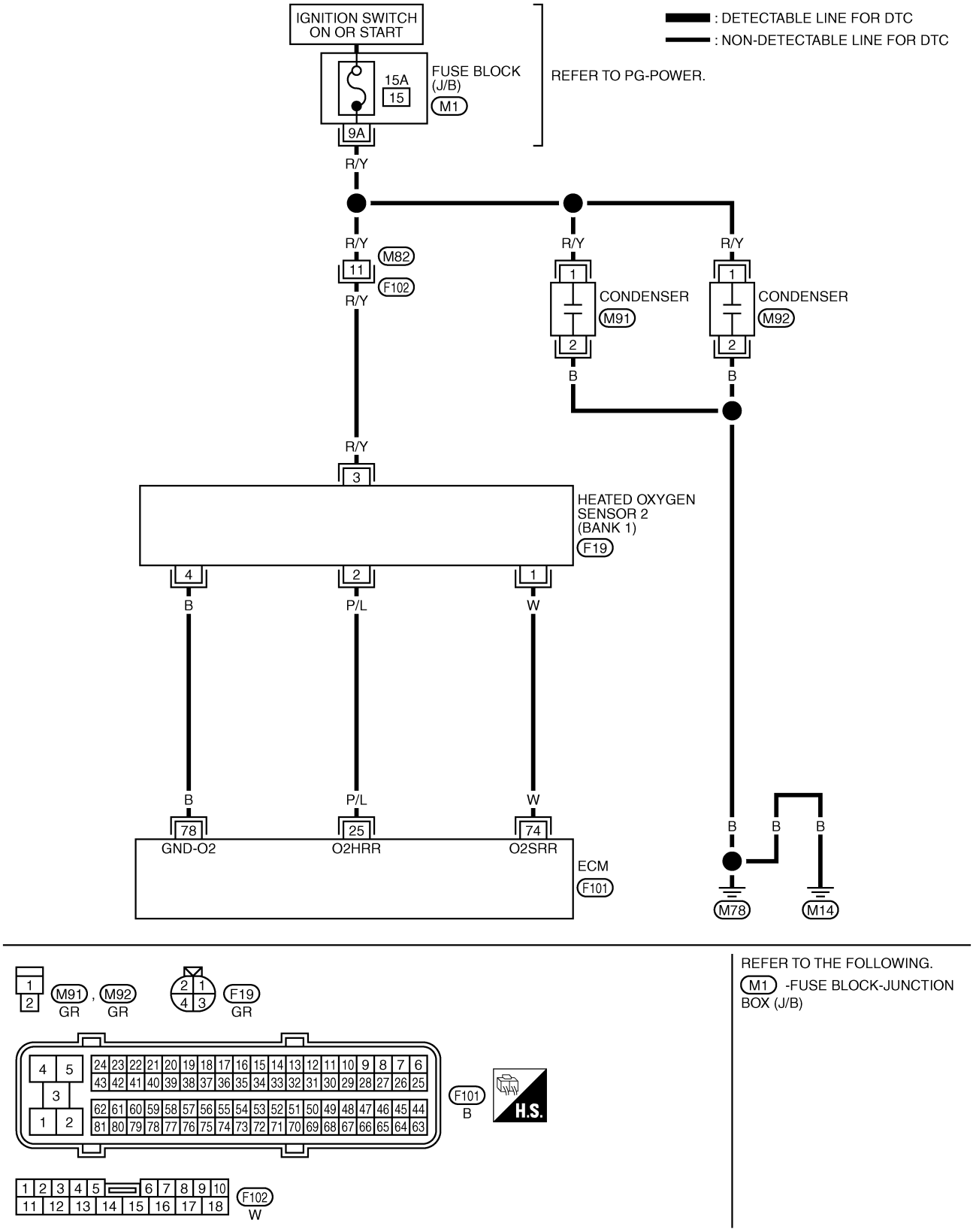

BANK 2

EC-RRO2B2-01

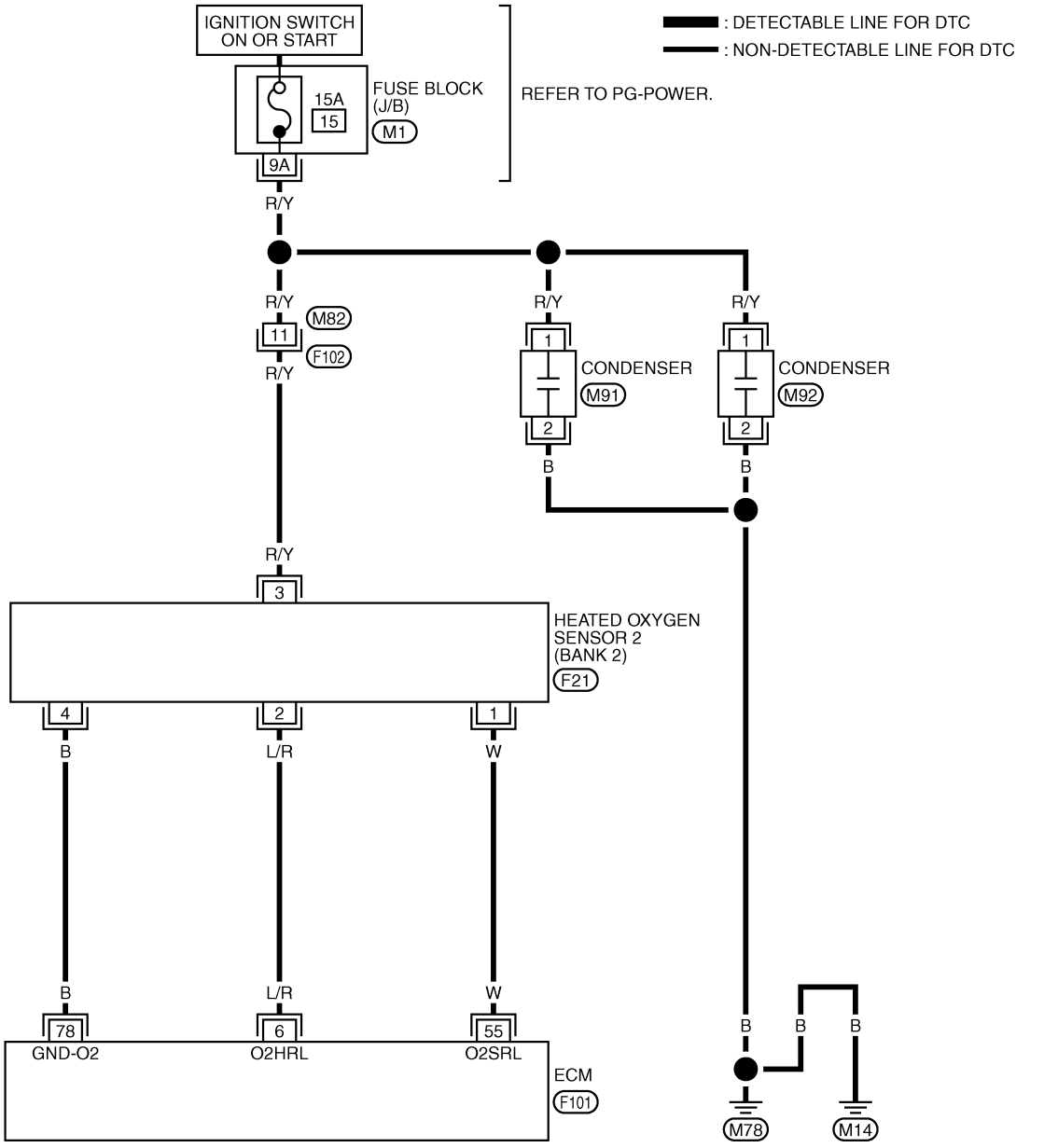

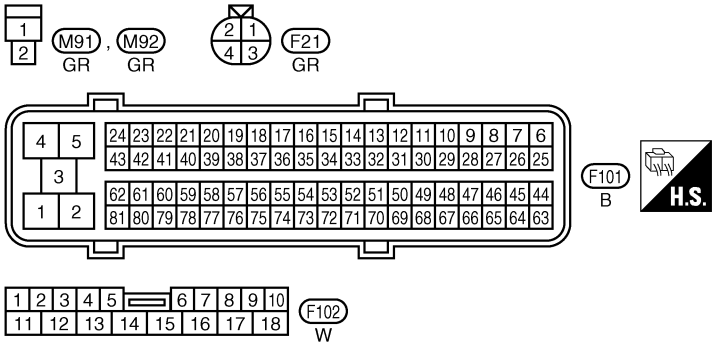

REFER TO THE FOLLOWING.

M1 -FUSE BLOCK-JUNCTION BOX (J/B)

TBWB0616E

IGNITION SIGNAL

PFP:22448

ABS00H0X

Wiring Diagram
LHD MODELS

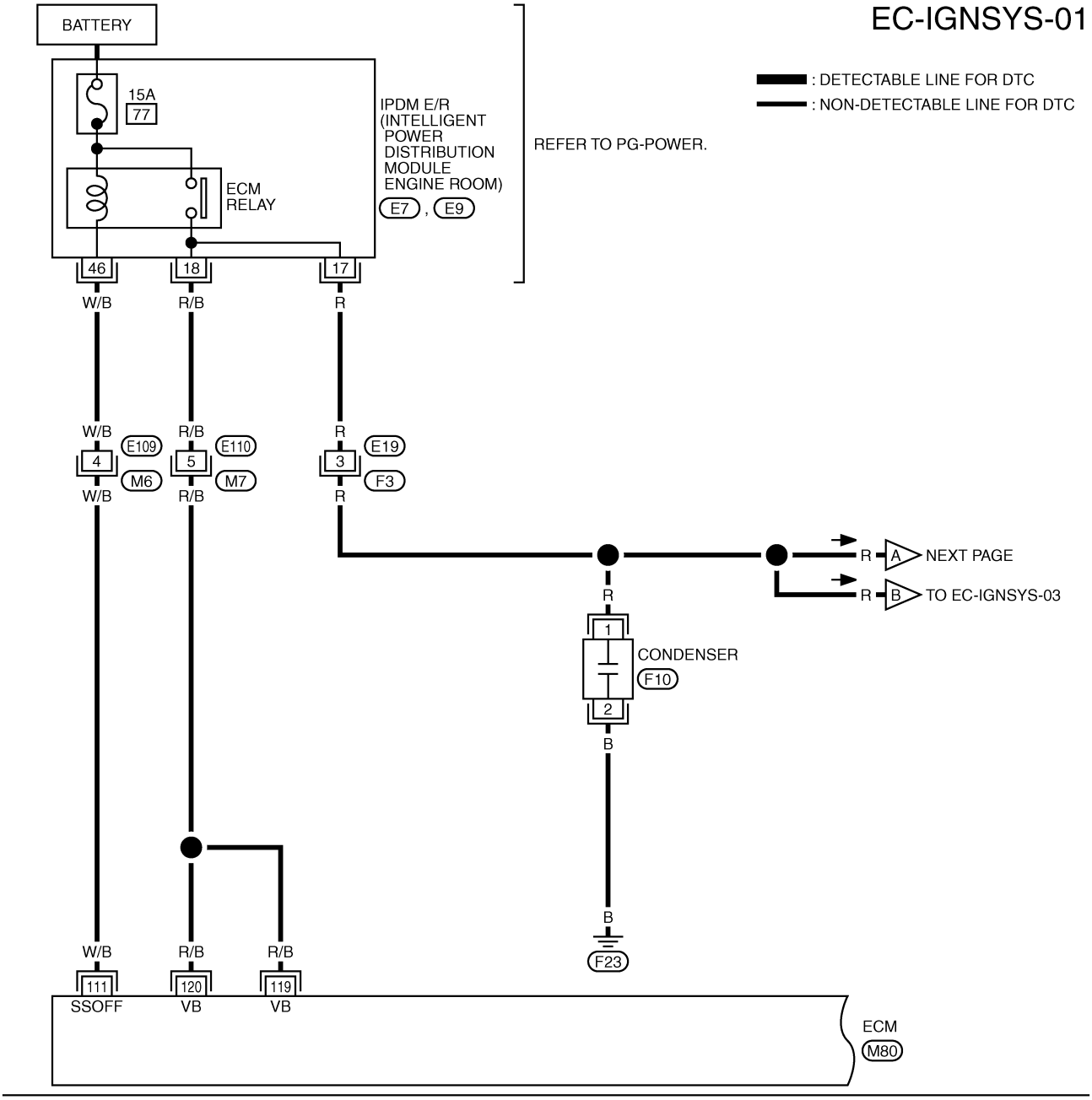

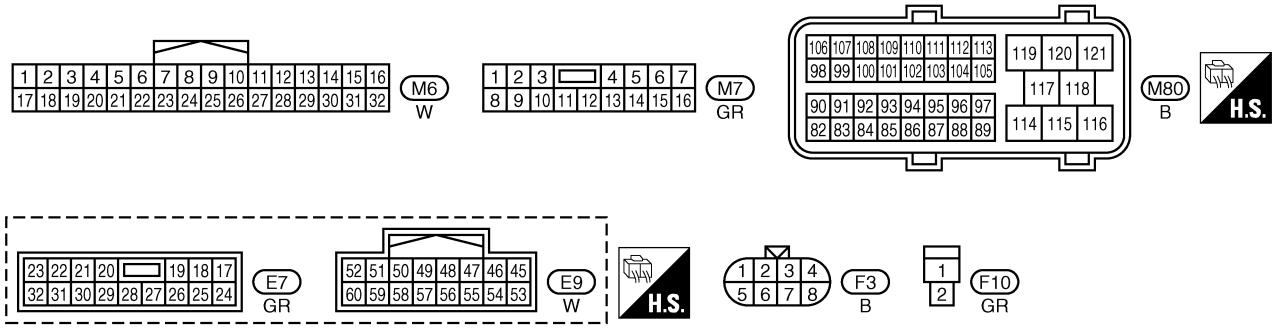

TBWB0537E

EC-IGNSYS-02

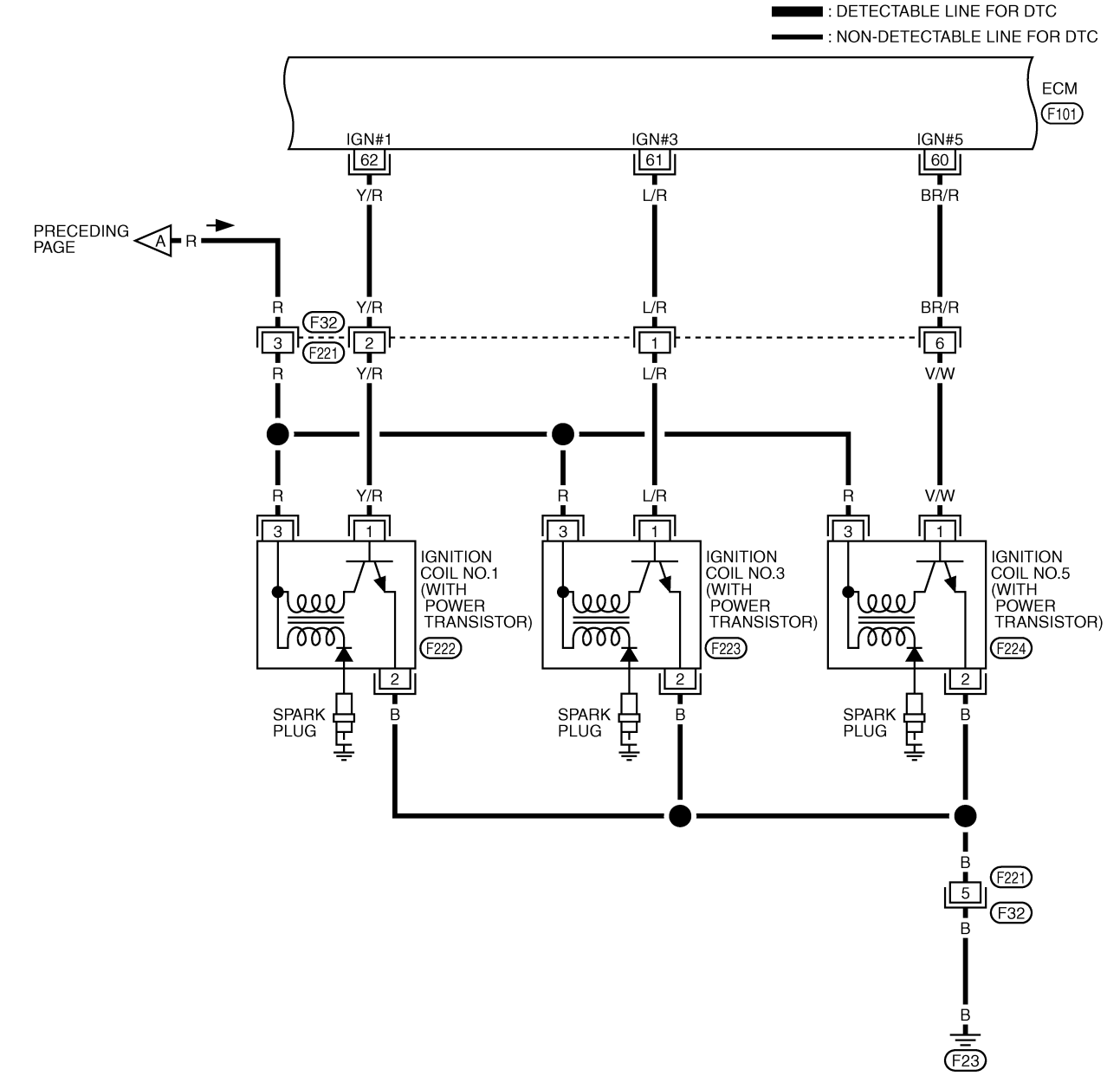

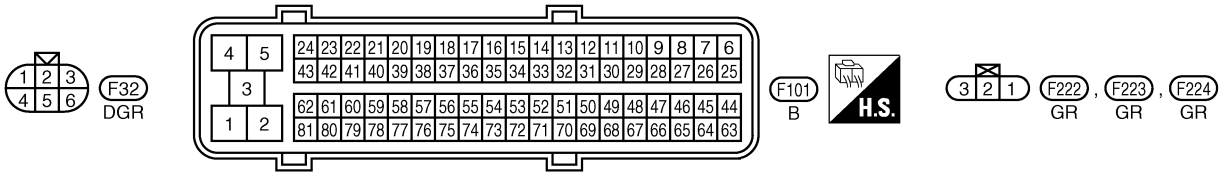

TBWA0388E

EC-IGNSYS-03

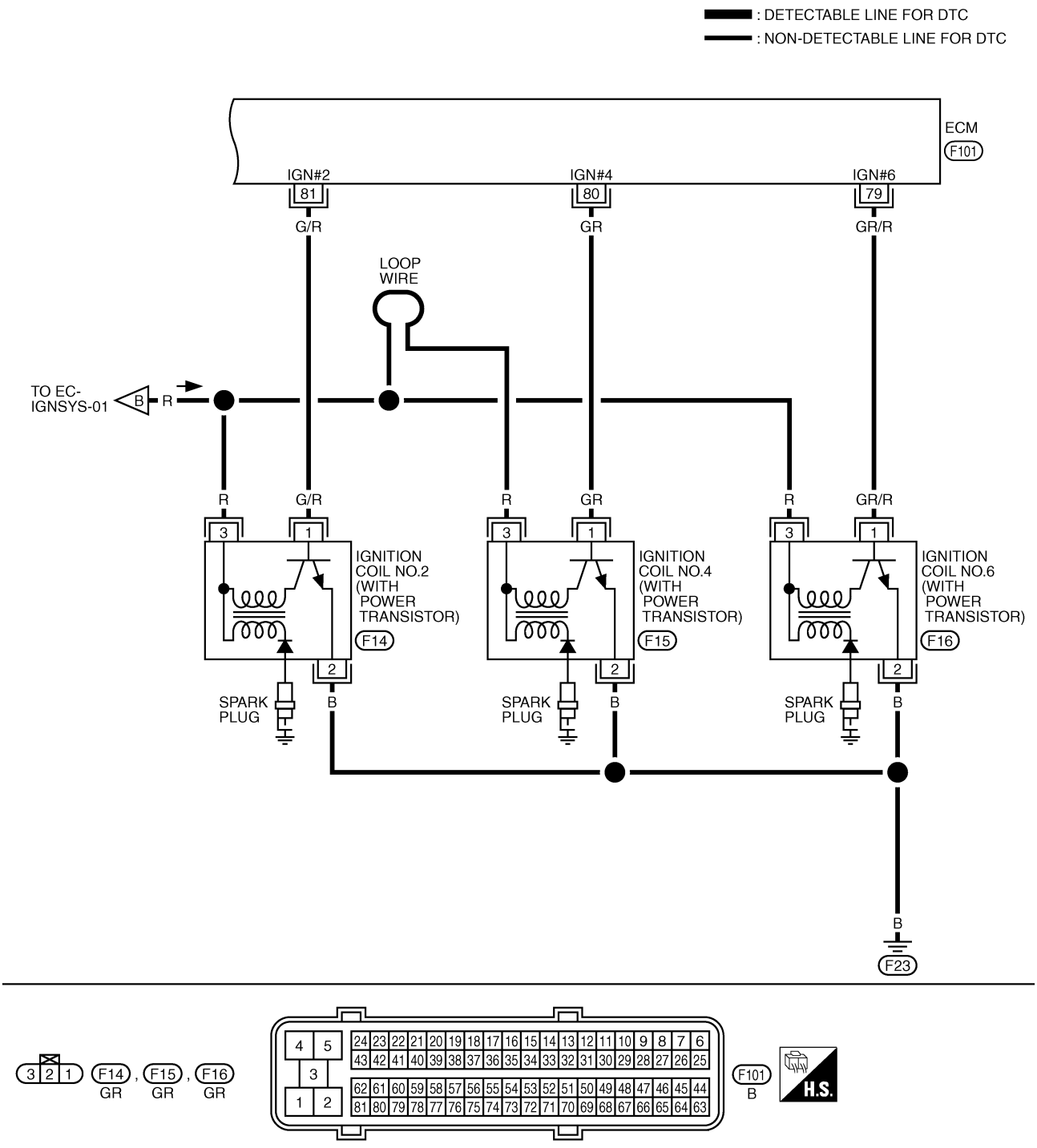

TBWA0389E

EVAP CANISTER PURGE VOLUME CONTROL SOLENOID VALVE

PFP:14920

Wiring Diagram

ABS00H13

LHD MODELS

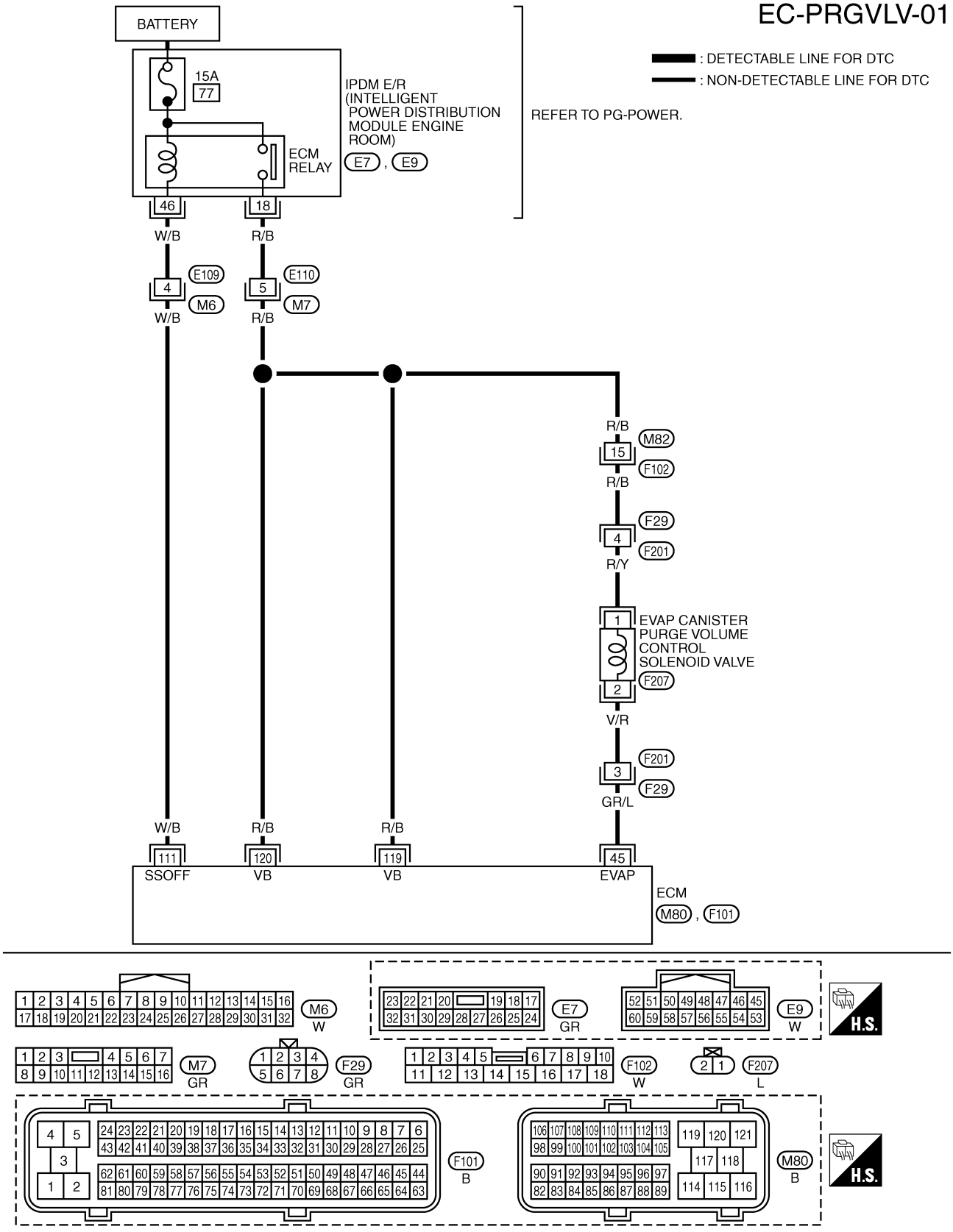

TBWB0619E

VIAS

PFP:14956

Wiring Diagram
LHD MODELS

ABS00H19

EC-VIAS-01

: DETECTABLE LINE FOR DTC
: NON-DETECTABLE LINE FOR DTC

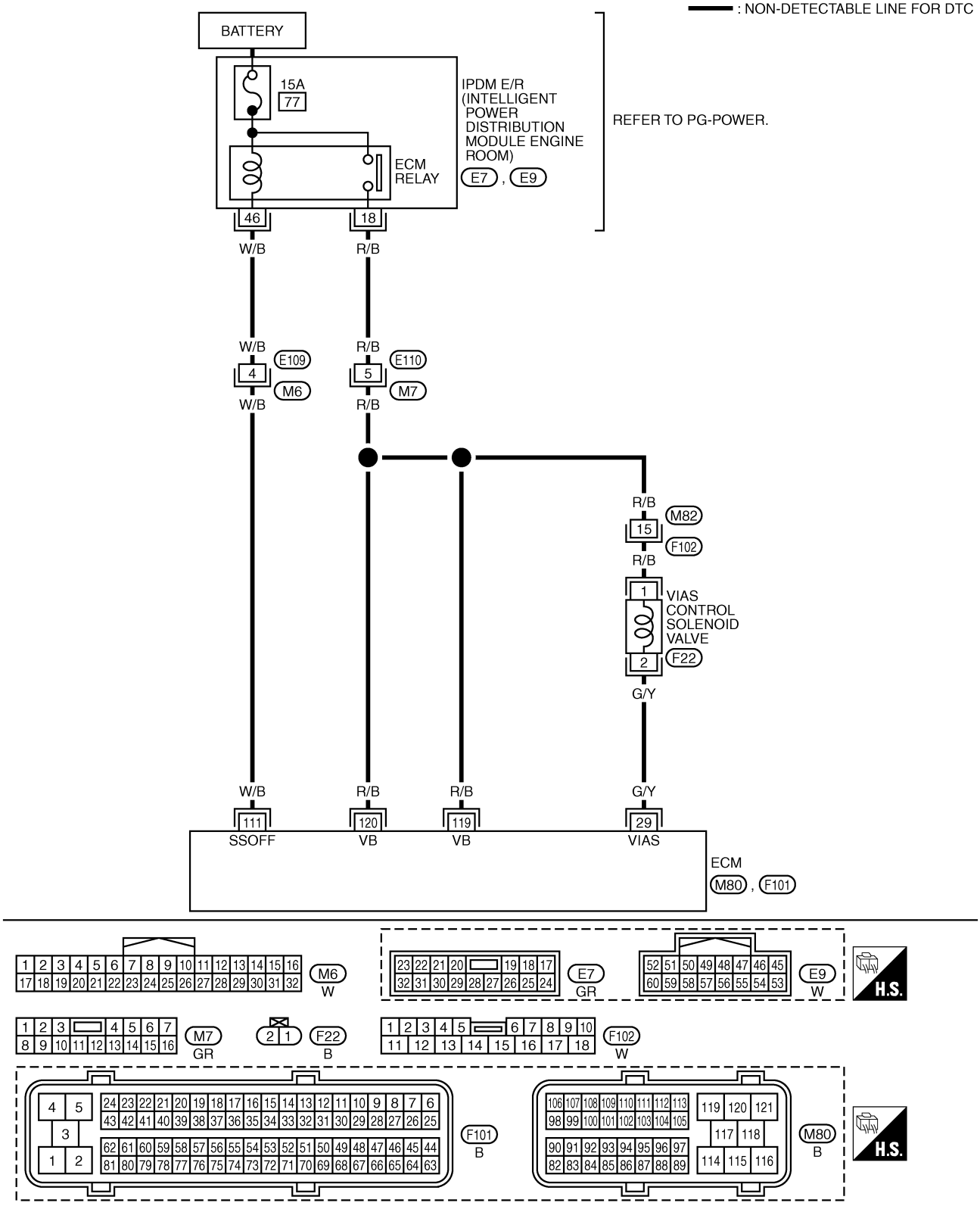

TBWB0541E

INJECTOR CIRCUIT

PFP:16600

Wiring Diagram
LHD MODELS

ABS00H1F

EC-INJECT-01

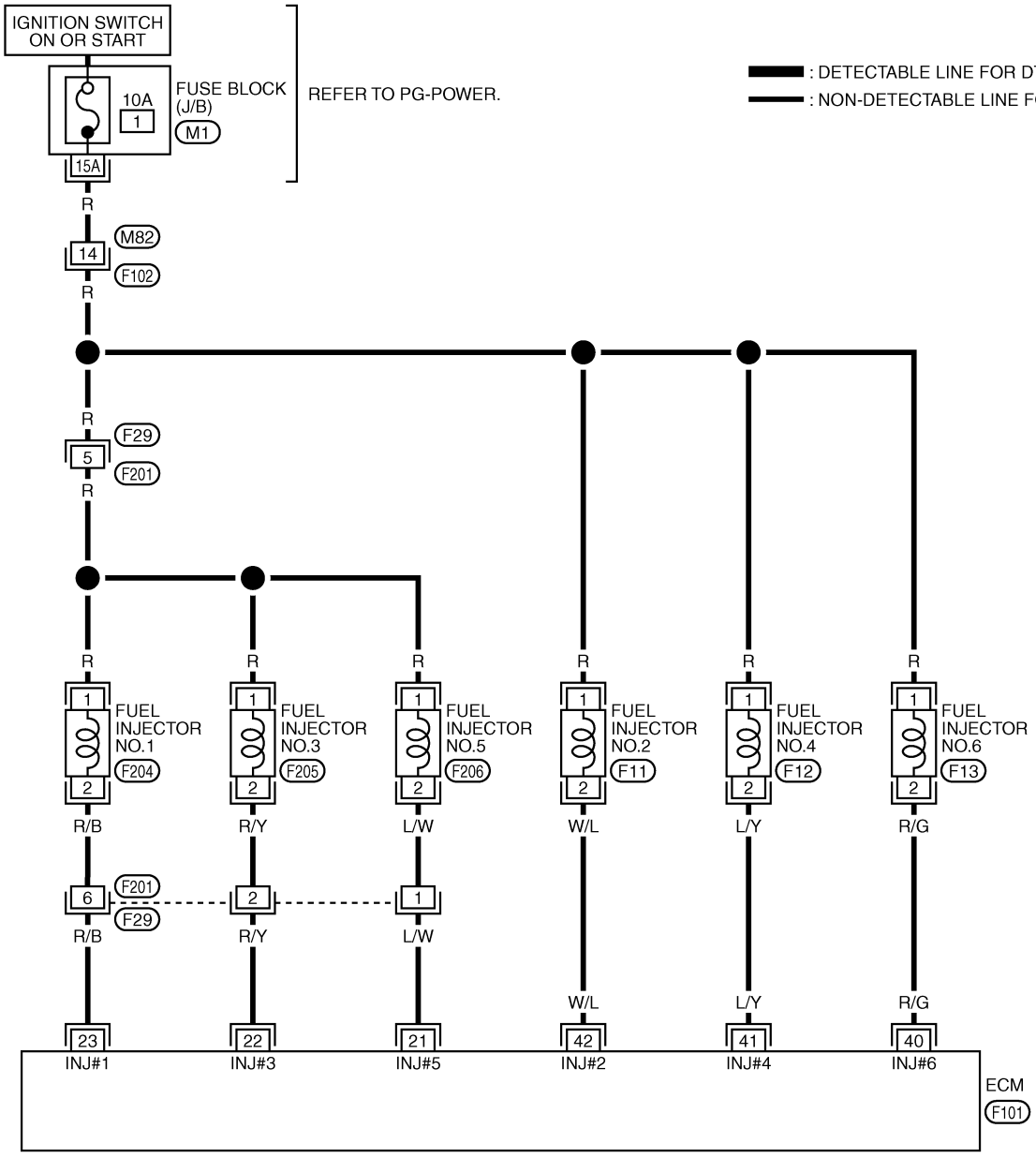

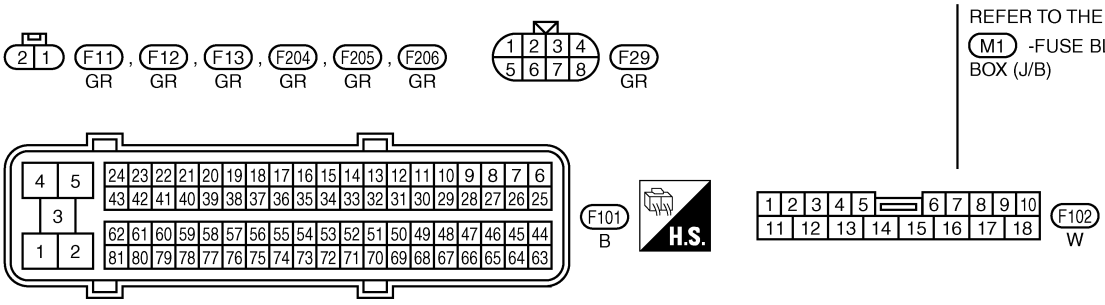

REFER TO THE FOLLOWING.
M1 -FUSE BLOCK-JUNCTION BOX (J/B)

TBWB0895E

FUEL PUMP CIRCUIT

PFP:17042

Wiring Diagram
LHD MODELS

ABS00H1L

EC-F/PUMP-01

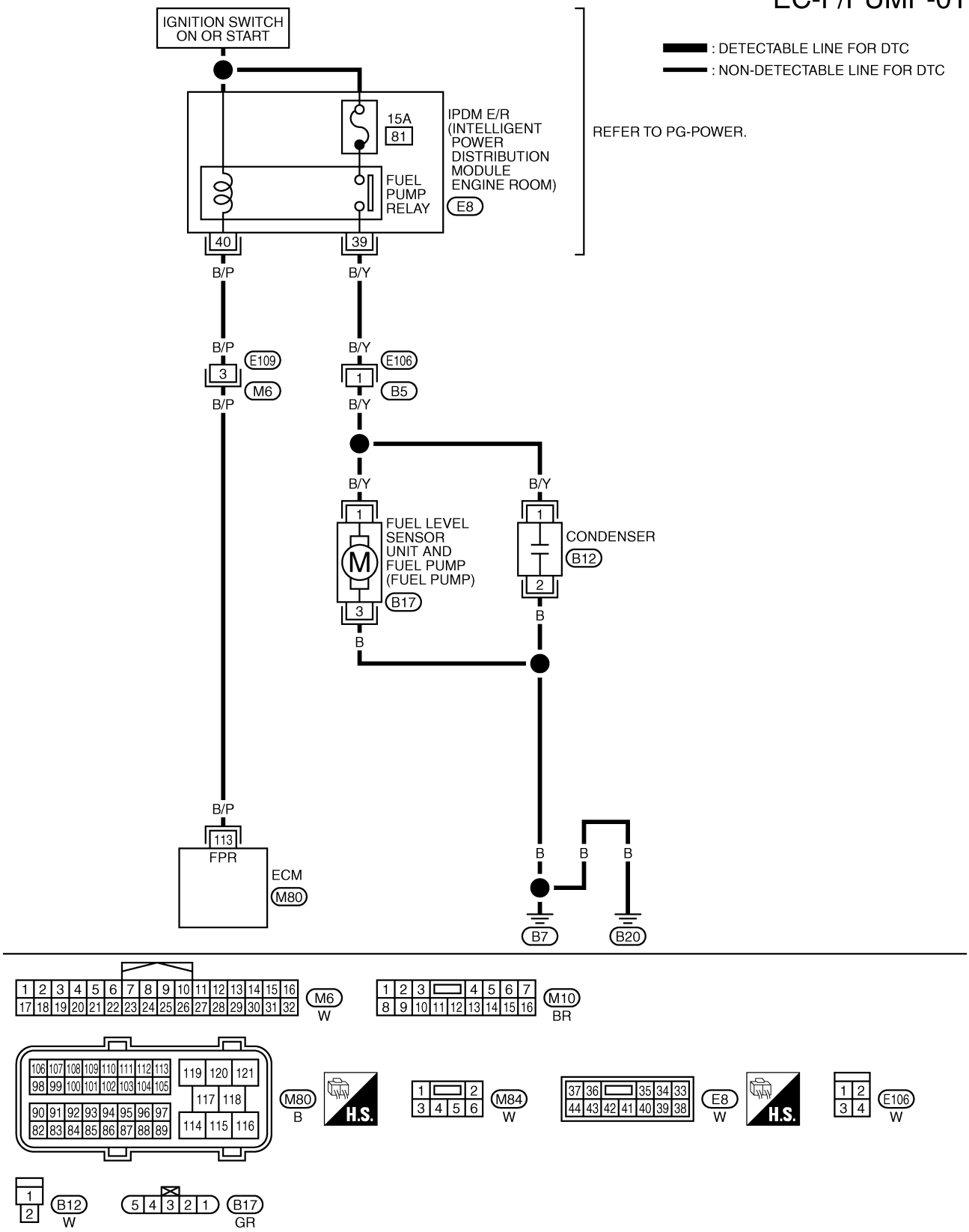

ELECTRONIC CONTROLLED ENGINE MOUNT

PFP:11270

Wiring Diagram
LHD MODELS

ABS00H1R

EC-EMNT-01

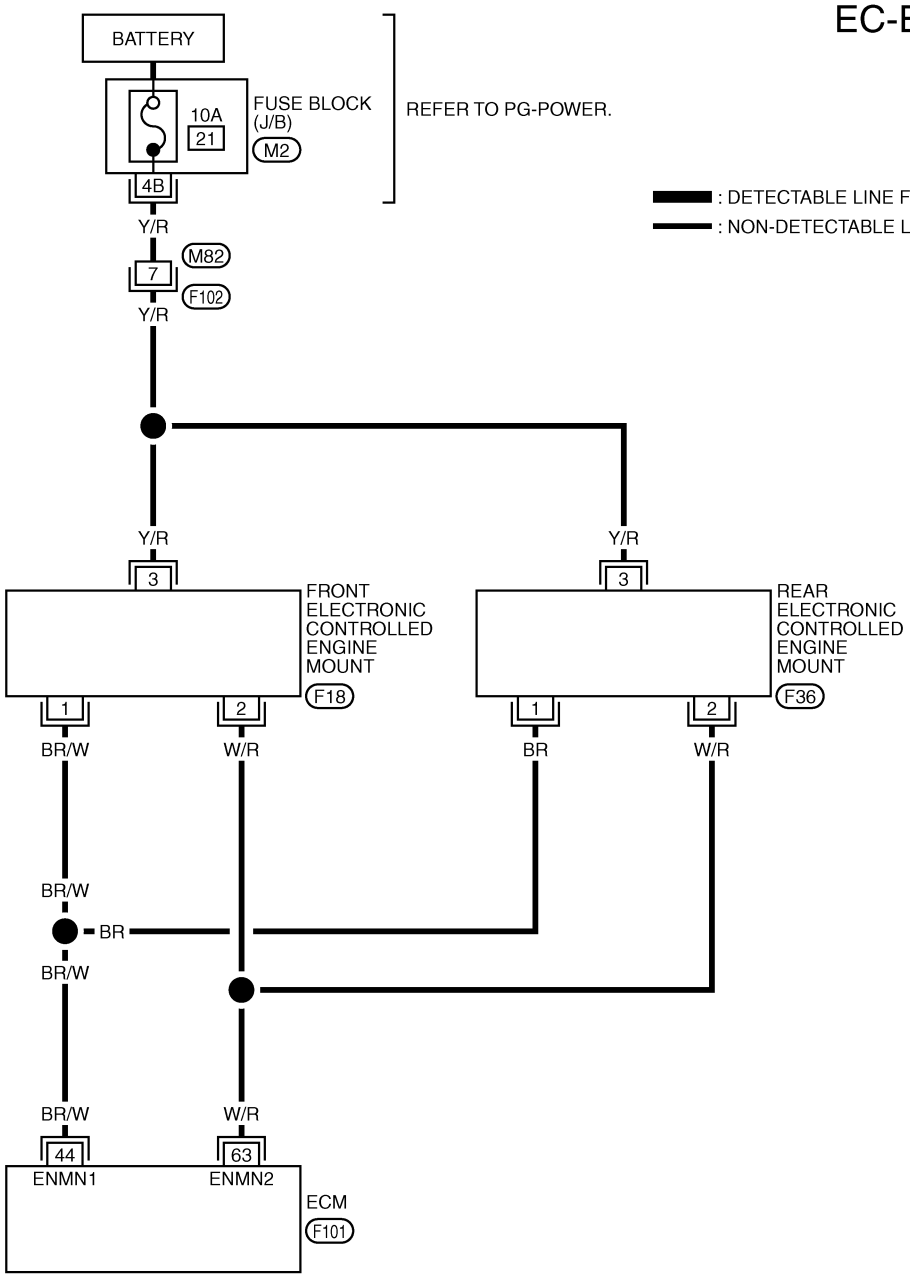

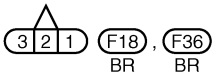

REFER TO THE FOLLOWING.
M2 -FUSE BLOCK-JUNCTION BOX (J/B)

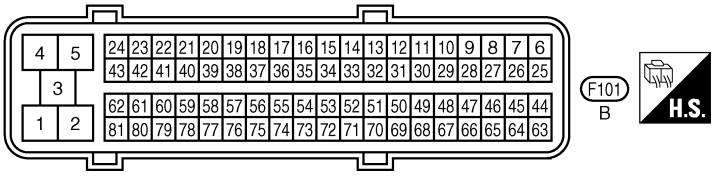

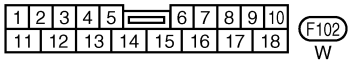

TBWB0897E

REFRIGERANT PRESSURE SENSOR

PFP:92136

Wiring Diagram
LHD MODELS

ABS00H1U

EC-RP/SEN-01

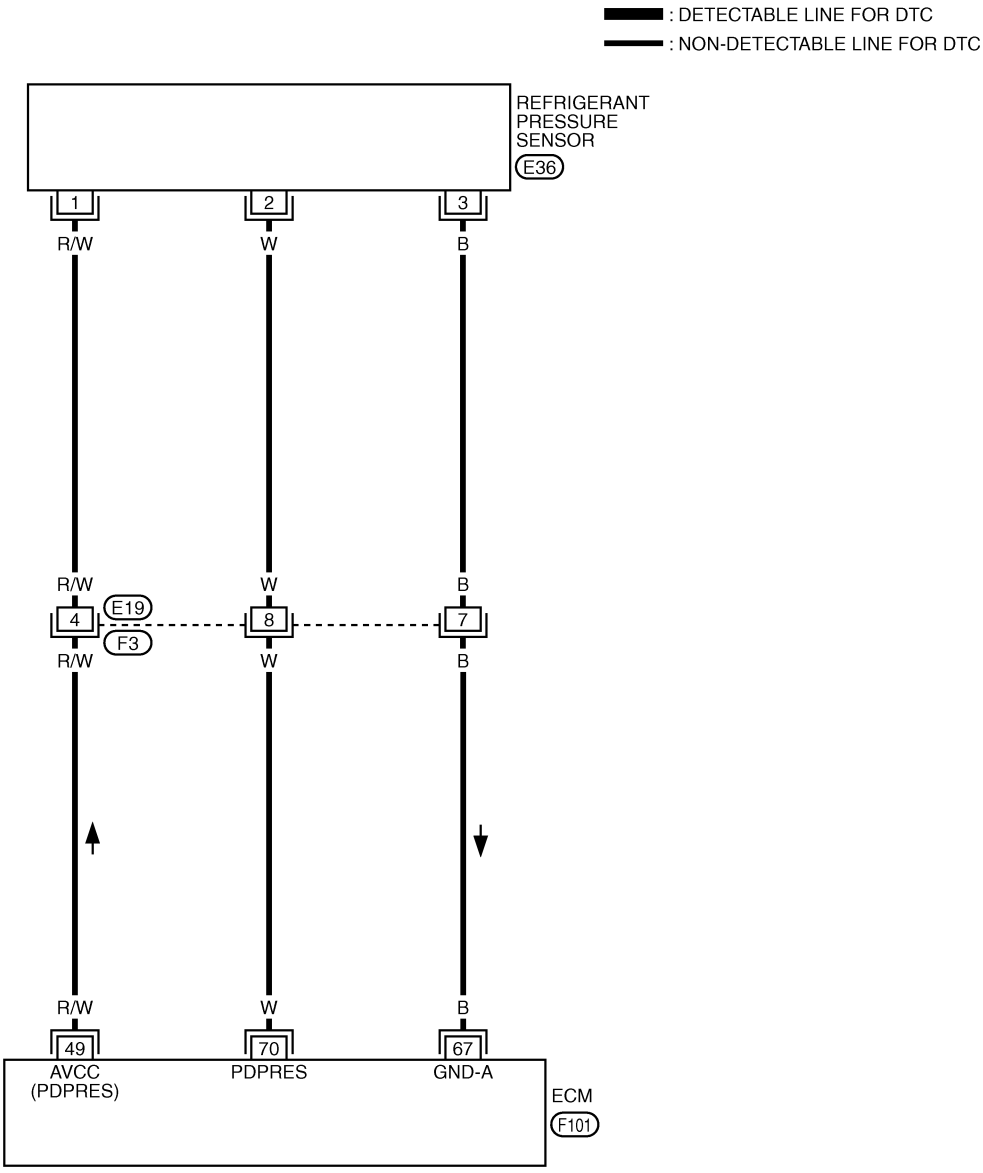

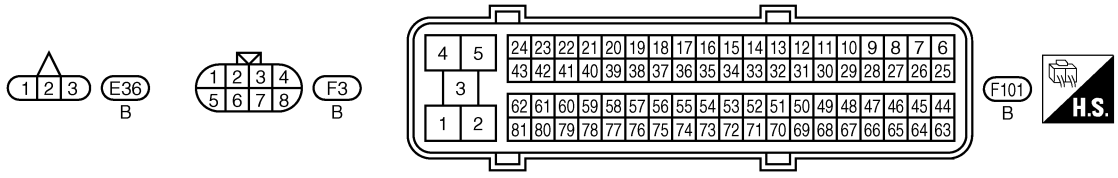

TBWA0722E

ASCD BRAKE SWITCH

PFP:25320

ABS00H22

Wiring Diagram
LHD MODELS

EC-ASCBOF-01

: DETECTABLE LINE FOR DTC
: NON-DETECTABLE LINE FOR DTC

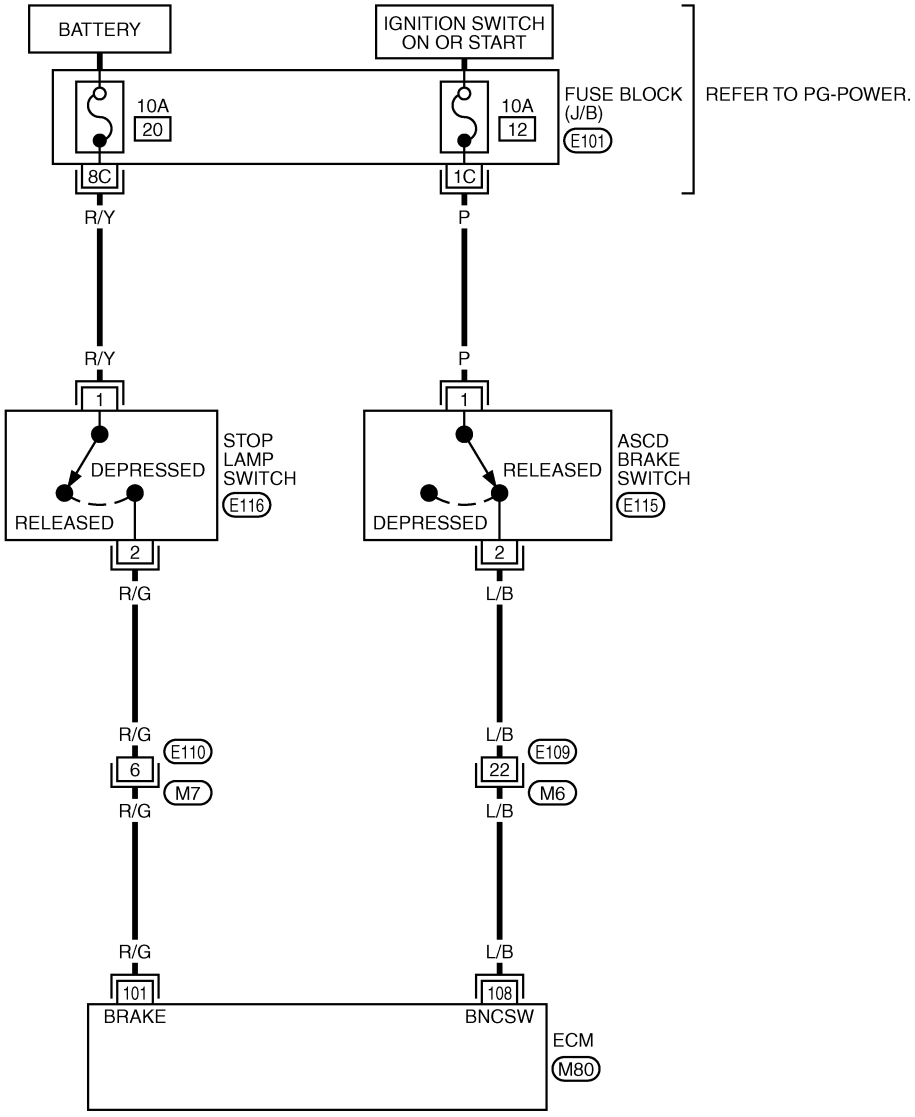

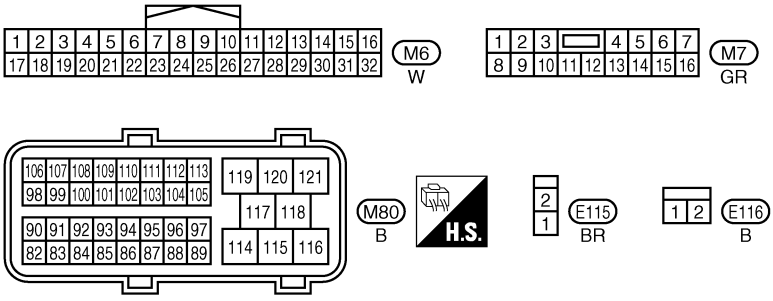

REFER TO THE FOLLOWING.
E101 -FUSE BLOCK-JUNCTION BOX (J/B)

TBWB0549E

ASCD INDICATOR

PFP:24814

Wiring Diagram

ABS00H27

LHD MODELS

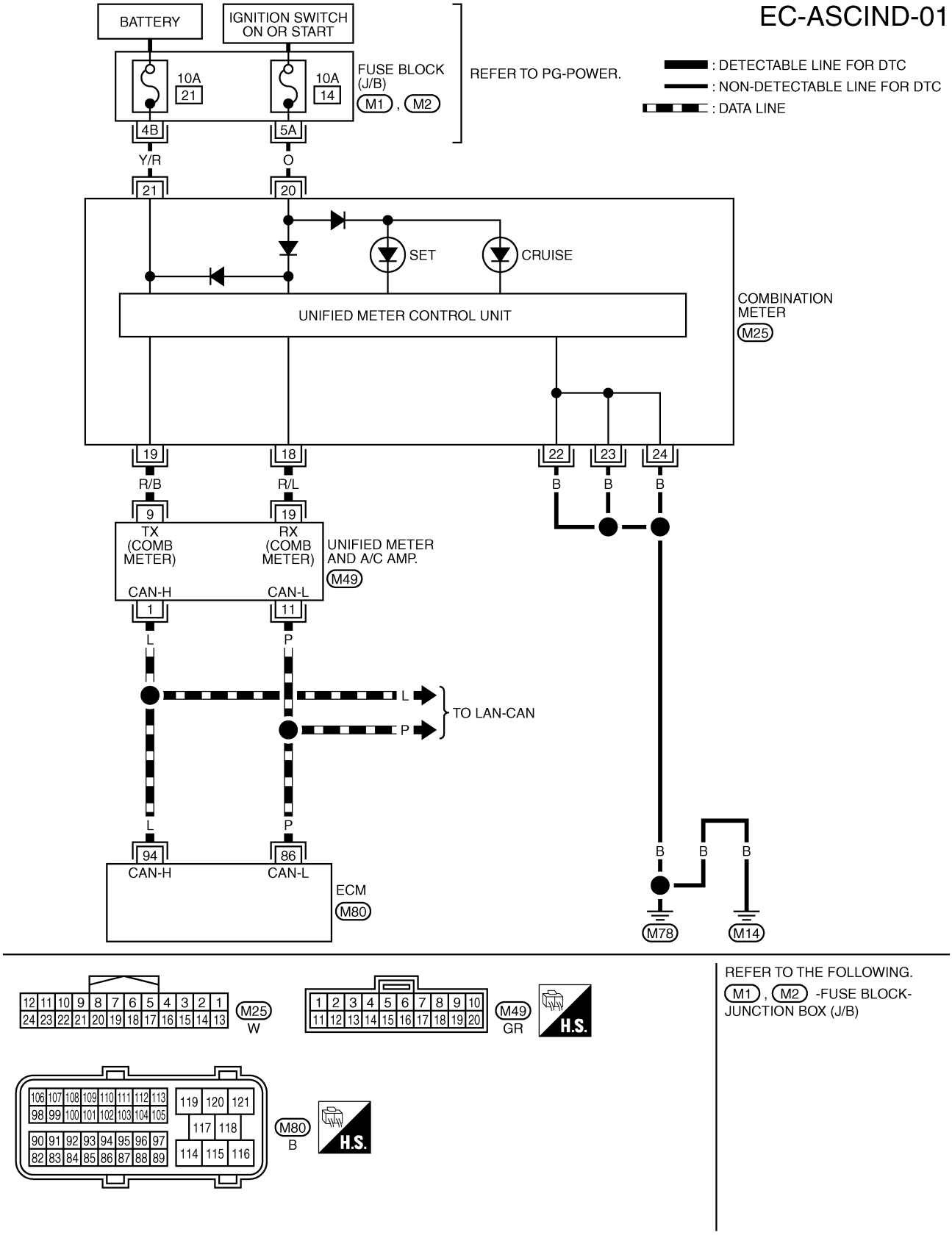

TBWB0551E

MIL AND DATA LINK CONNECTOR

PFP:24814

ABS00H29

Wiring Diagram
LHD MODELS

EC-MIL/DL-01

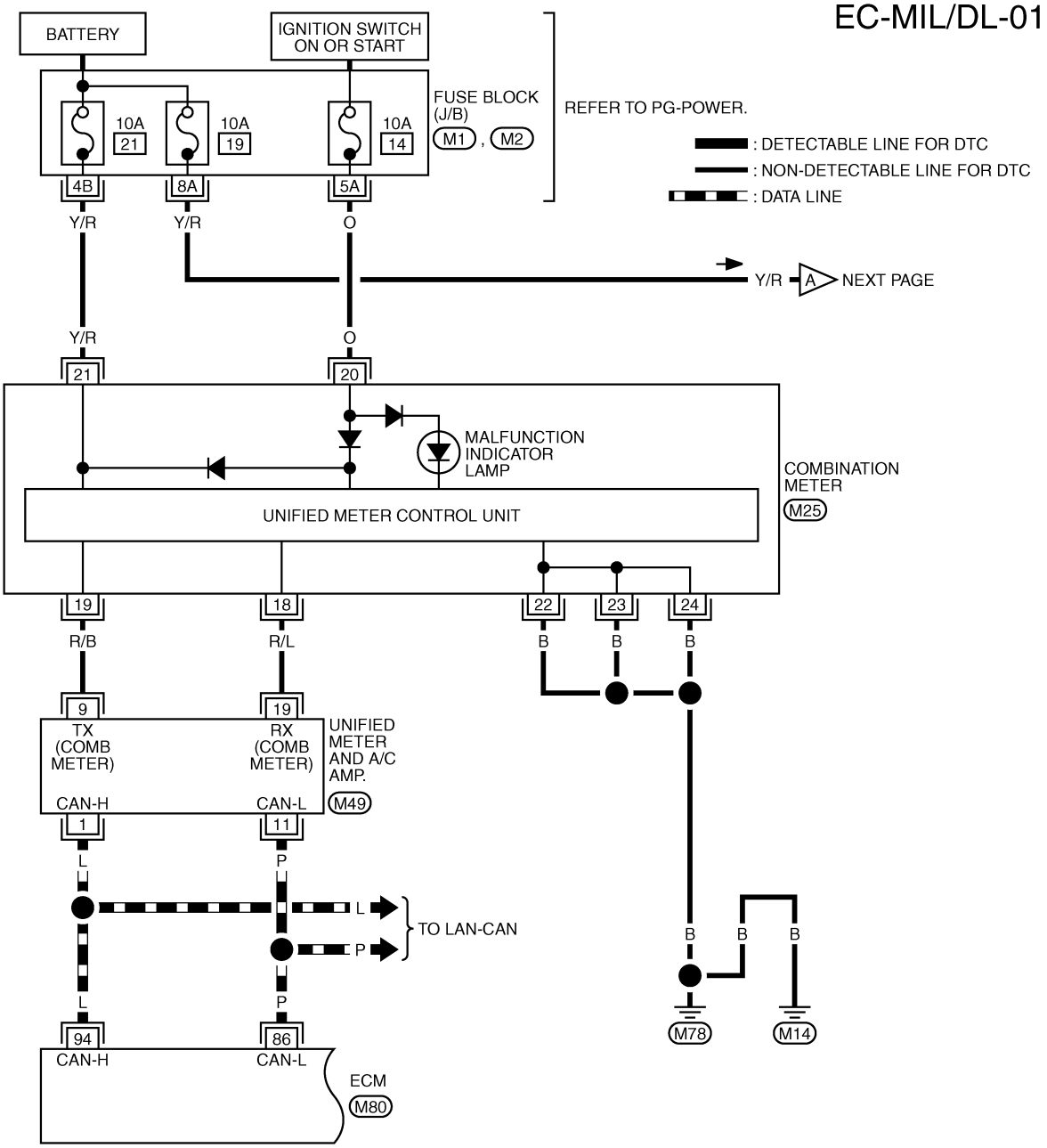

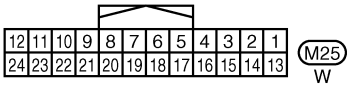

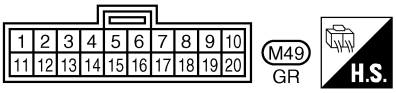

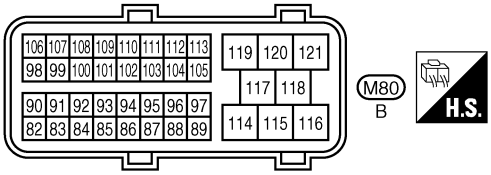

REFER TO THE FOLLOWING.
M1 , M2 -FUSE BLOCK-JUNCTION BOX (J/B)

TBWB1173E

EC-MIL/DL-02

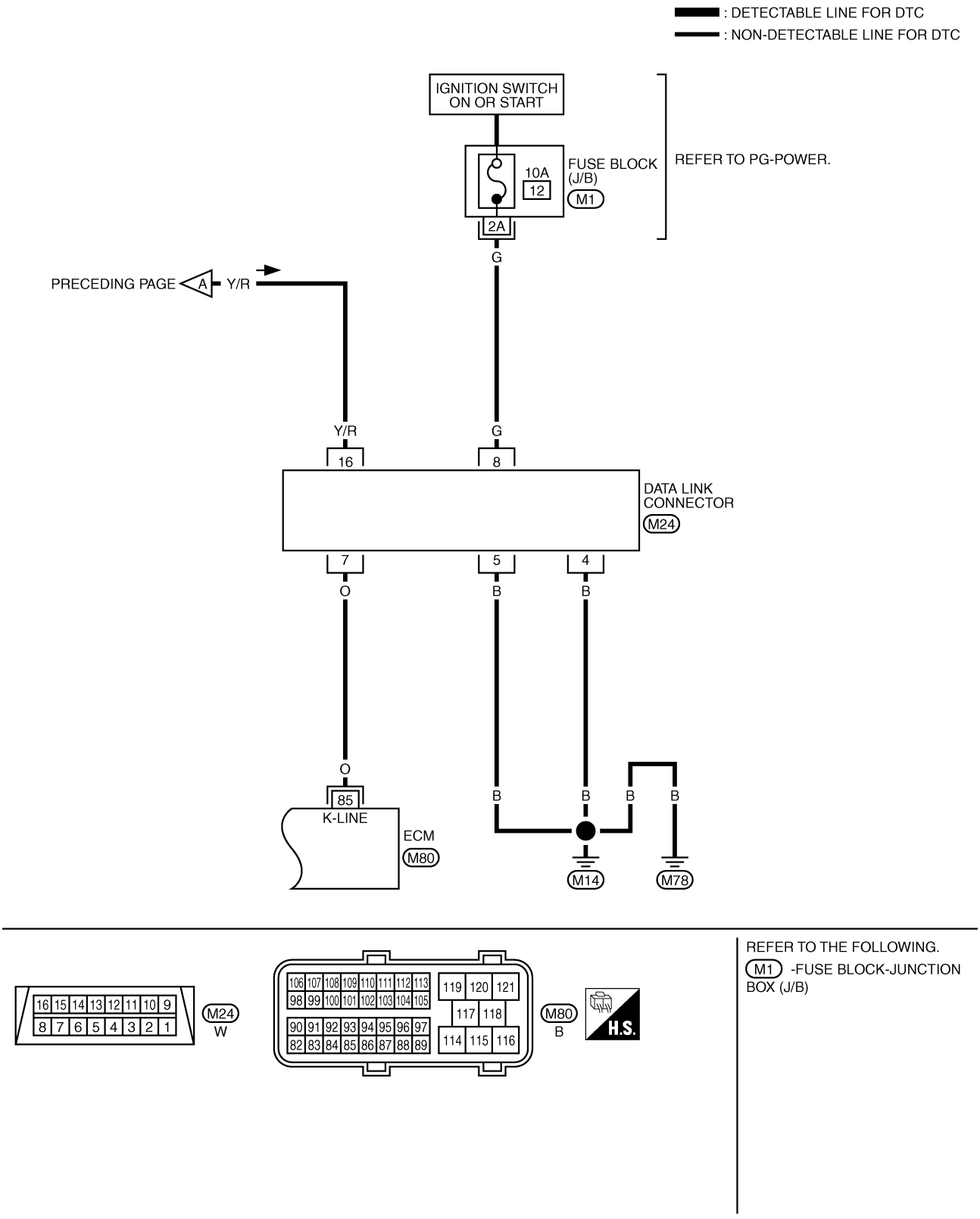
: DETECTABLE LINE FOR DTC
: NON-DETECTABLE LINE FOR DTC
IGNITION SWITCH ON OR START
10A
12
FUSE BLOCK (J/B)
M1
REFER TO PG-POWER.
2A
G
PRECEDING PAGE
A
Y/R
Y/R
16
G
8
DATA LINK CONNECTOR
M24
7
5
4
O
B
B
O
85
K-LINE
ECM
M80
B
B
B
B
M14
M78
16 15 14 13 12 11 10 9
8 7 6 5 4 3 2 1
M24
W
106 107 108 109 110 111 112 113
98 99 100 101 102 103 104 105
119 120 121
117 118
90 91 92 93 94 95 96 97
82 83 84 85 86 87 88 89
114 115 116
M80
B
H.S.
REFER TO THE FOLLOWING.
M1 -FUSE BLOCK-JUNCTION BOX (J/B)
TBWA0375E

EC-MIL/DL-02

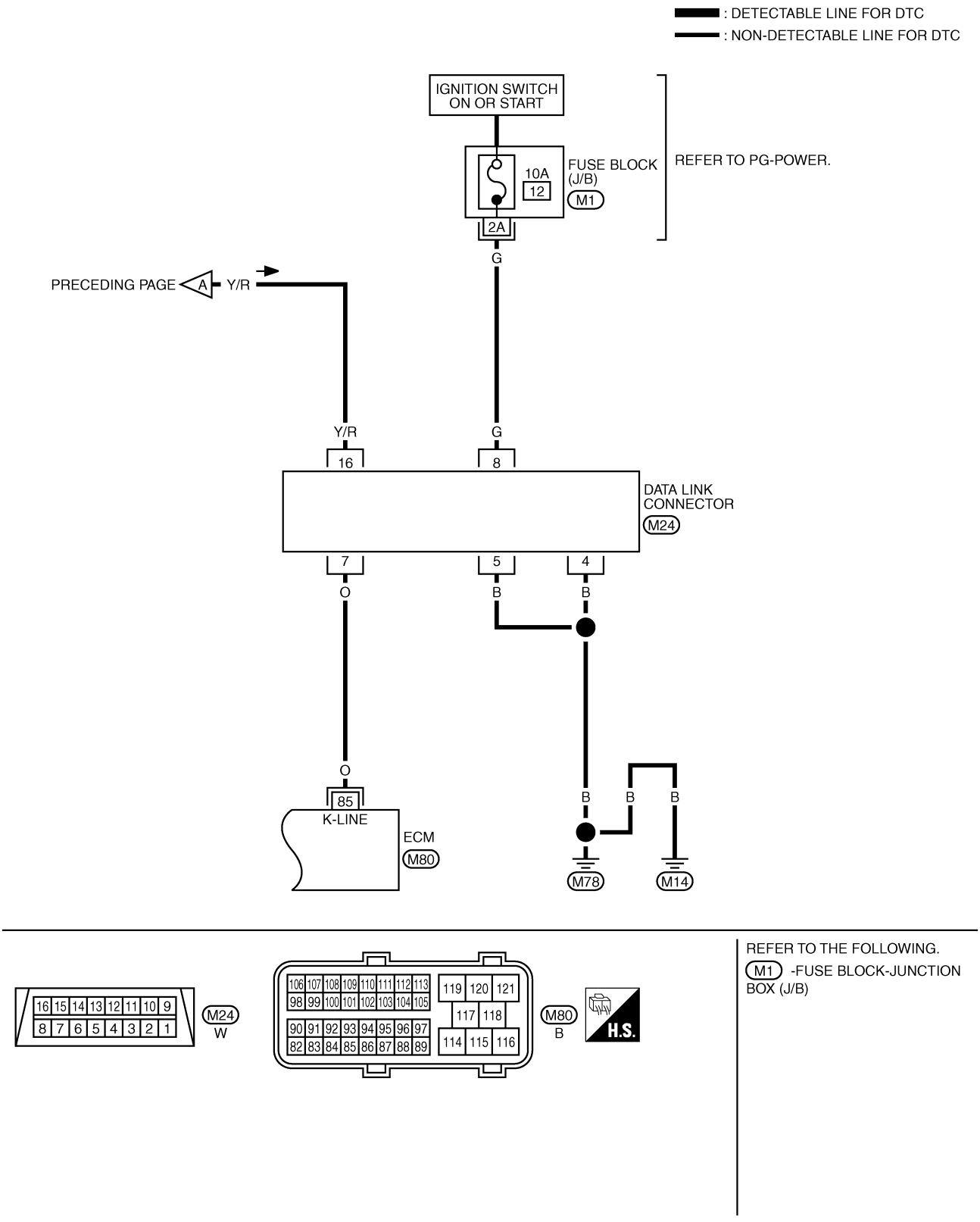
: DETECTABLE LINE FOR DTC
: NON-DETECTABLE LINE FOR DTC
IGNITION SWITCH ON OR START
FUSE BLOCK (J/B)
M1
10A
12
2A
REFER TO PG-POWER.
G
PRECEDING PAGE
A
Y/R
Y/R
16
G
8
DATA LINK CONNECTOR
M24
7
5
4
O
B
B
O
85
K-LINE
ECM
M80
B
B
B
M78
M14
M24
W
M80
B
H.S.
REFER TO THE FOLLOWING.
M1 -FUSE BLOCK-JUNCTION BOX (J/B)
TBWB0791E

SERVICE DATA AND SPECIFICATIONS (SDS)

PFP:00030

Fuel Pressure

ABS00H2A

Fuel pressure at idling kPa (bar, kg/cm^2 , psi)	Approximately 350 (3.5, 3.57, 51)

Idle Speed and Ignition Timing

ABS00H2B

Target idle speed	No load* (in P or N position)	625 ± 50 rpm
Air conditioner: ON	In P or N position	700 rpm or more
Ignition timing	In P or N position	15 ± 5° BTDC

*: Under the following conditions:

- Air conditioner switch: OFF
- Electric load: OFF (Lights, heater fan & rear window defogger)
- Steering wheel: Kept in straight-ahead position

Mass Air Flow Sensor

ABS00H2C

Supply voltage	Battery voltage (11 - 14V)
Output voltage at idle	0.9 - 1.2*V

*: Engine is warmed up to normal operating temperature and running under no load.

Intake Air Temperature Sensor

ABS00H2D

Temperature °C (°F)	Resistance kΩ
25 (77)	1.800 - 2.200
80 (176)	0.283 - 0.359

Engine Coolant Temperature Sensor

ABS00H2E

Temperature °C (°F)	Resistance kΩ
20 (68)	2.1 - 2.9
50 (122)	0.68 - 1.00
90 (194)	0.236 - 0.260

Air Fuel Ratio (A/F) Sensor 1 Heater

ABS00H2F

Resistance [at 25°C (77°F)]	2.3 - 4.3Ω

Heated Oxygen Sensor 2 Heater

ABS00H2G

Resistance [at 25°C (77°F)]	5.0 - 7.0Ω

Throttle Control Motor

ABS00H2J

Resistance [at 25°C (77°F)]	Approximately 1 - 15Ω

Injector

ABS00H2K

Resistance [at 10 - 60°C (50 -140°F)]	11.1 - 14.5Ω

Fuel Pump

ABS00H2L

Resistance [at 25°C (77°F)]	Approximately 0.2 - 5.0Ω