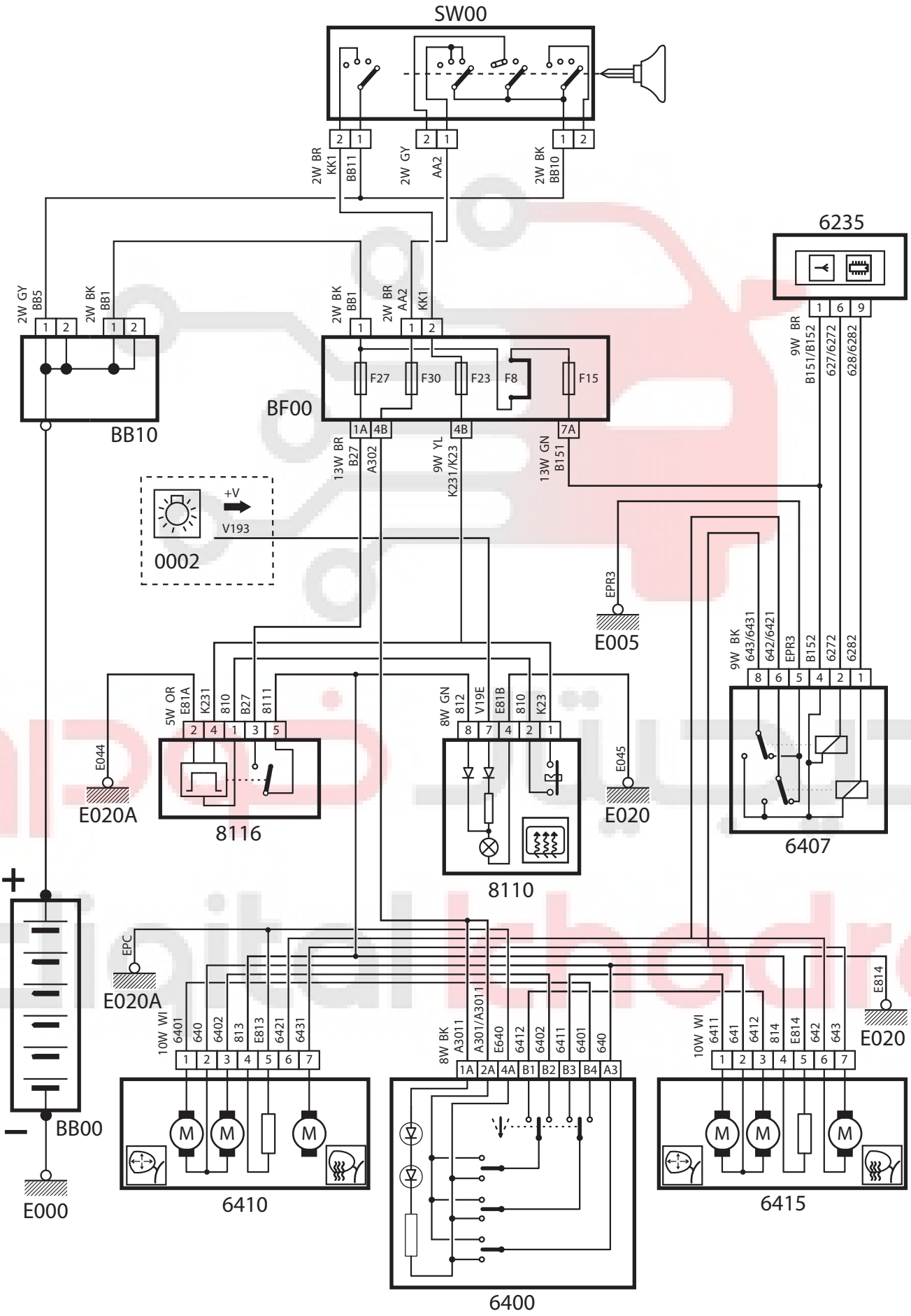Samand Folding Mirror (LX)