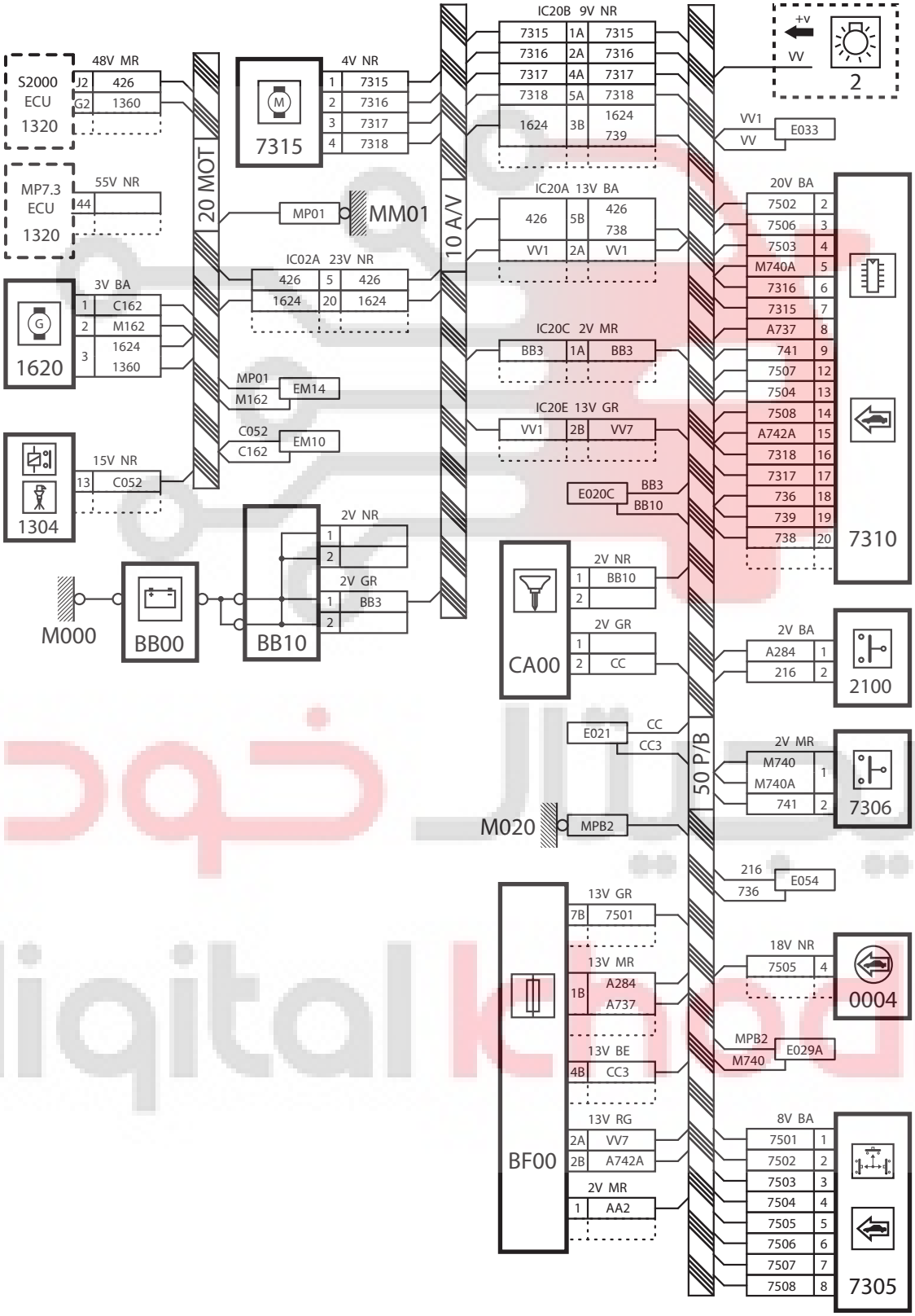# Cruise Control System(PARS)